Exhibit 1

BROWARD COUNTY FLORIDA

MEMORANDUM OF UNDERSTANDING BETWEEN NEW CINGULAR WIRELESS PCS, LLC AND BROWARD COUNTY REGARDING MICROCELL FACILITY AND MACRO LEASE

This Memorandum of Understanding ("MOU") is entered into between New Cingular Wireless PCS, LLC f/k/a AT&T Wireless of South Florida ("AT&T") and Broward County, a political subdivision of the State of Florida ("County") (each a "Party" and collectively referred to as the "Parties").

RECITALS

A. AT&T entered into leases identified by AT&T as Agreement ID# 73670 and 73671 with SMG, the operator of the Broward County Convention Center ("Convention Center") which, generally, provide for the rental of exterior space on the Convention Center for the placement of AT&T antennas, interior space within the Convention Center for an AT&T equipment room, and for underground conduits on and adjacent to the Convention Center (collectively, the "AT&T Spaces"). Agreement ID# 73670 and 73671, along with any other agreements between AT&T (or any of its predecessors in interest) have or had with SMG regarding space at or about the Convention Center, are collectively referred to as the "Agreements."

B. A dispute exists between AT&T and County regarding the validity of the Agreements and whether AT&T has any ongoing authority or right to occupy and use the AT&T Spaces and, to the extent that County requires AT&T to remove its antennas, underground ductbank, equipment, and other property (collectively, "AT&T Equipment") who is responsible for the costs associated therewith (the "Dispute").

C. The Parties have reached an understanding in connection with a resolution of the Dispute and wish to describe the general terms of such resolution, and are also desirous to enter into this MOU to set out the basic framework for a future binding license agreement between them for space at the Convention Center for the future placement of the AT&T Equipment, and to address the costs associated therewith.

NOW, THEREFORE, IN CONSIDERATION of the mutual terms, conditions, promises, and covenants hereinafter stated, the Parties agree as follows:

1. Recitals Incorporated. The recitals stated above are true and correct and are incorporated herein by reference as if fully stated.

2. Effective Date. The effective date of this MOU is the date that the last of the Parties signs this MOU and delivers same to the other Party ("Effective Date").

3. Termination of Agreement; Pro-rated Refund of Current Rent. As of the Effective Date, AT&T and County agree that the Agreements are terminated and of no legal force or effect. County will, within thirty (30) days after the Effective Date, refund to AT&T a pro-rated amount of the current year's rent payment made by AT&T pursuant to the Agreements. Notwithstanding the use of "termination" and "rent" in this paragraph, nothing in this MOU shall be construed as

County's acknowledgment that the Agreements are valid agreements or leases, and neither County nor AT&T waive any claims or defenses associated with the validity or invalidity of the Agreements.

4. New License Agreement. AT&T and County will enter into a new multi-year license agreement (rather than a lease) whereby AT&T will be granted the right of use of space on the Convention Center for the placement of antennas to be no larger than those used currently and an equipment shelter (the "New License Agreement"). County acknowledges that is has been provided with the Construction Drawing attached hereto as Exhibit A and approved the design shown in said exhibit. In addition, any future antenna design changes substantially similar in size in the identical location would be approved by County (County makes no representation regarding any City of Fort Lauderdale permits or approvals that AT&T may be required to obtain). The term of the New License Agreement will be for an initial term of fifteen (15) years, with the ability for AT&T and the County to, by mutual agreement, enter into up to three (3) additional five (5) year extensions thereafter. The County will agree to enter into at least one of the additional five (5) year extensions unless the space used for the placement of antennas is to be demolished or the Convention Center will undergo construction that will render the licensed space unusable for the antennas. If County does not enter into the first five (5) year extension due to such construction, the New License Agreement expire per its terms with no further obligations owed by County to AT&T associated therewith. AT&T has the right to terminate upon sixty (60) days' prior notice at any time after ten (10) years for any reason or no reason. The license fees to be paid by AT&T under the New License Agreement will be Thirty-Eight Thousand Three Hundred Fifty-Two and 50/100 Dollars ($38,352.50) annually, increasing three percent (3%) per year, but the fees shall be abated for such time as provided in Paragraph 6 of this MOU.

5. Removal of Existing AT&T Equipment/Temporary Equipment Placement. On or before February 21, 2020, AT&T shall coordinate with County and vacate and/or remove the AT&T Equipment from the interior AT&T Equipment room. AT&T shall have the right to place a temporary cell on wheels on top of the parking garage that is adjacent to the Convention Center property. Any underground ductbank will either remain in their current location or, to the extent directed by County, moved to another location to facilitate ongoing County construction at the Convention Center site. AT&T shall coordinate the work provided in this paragraph with County and its contractors and shall perform the work in a professional manner that does not disrupt or delay County's ongoing construction activities in and around the Convention Center. The work to be performed as generally described in this paragraph as well as any final work to place the AT&T equipment at the location agreed to in the New License Agreement is collectively referred to as the "AT&T Work."

6. Cost-Sharing of AT&T Work; License Fee Abatement. County and AT&T shall equally share AT&T's actual costs associated with the AT&T Work, with County's contribution not-to-exceed Two Hundred Thousand Dollars ($200,000.00). AT&T shall be responsible for all costs in excess of $400,000, with the County contributing 50% of the first $400,000 expended on the AT&T Work. County's contribution towards the AT&T Work shall be deducted from the licensee fees to be paid by AT&T to County pursuant to the New License Agreement. Until such time as these amounts have been recouped by AT&T through such license fee abatement, no amounts will be owed by AT&T to County under the New License Agreement.

7. Additional Terms of New License Agreement. County and AT&T acknowledge and agree that there will be additional terms contained in the New License Agreement other than those described in this MOU and shall work in good faith to reach agreement. County and AT&T will use the agreement template attached hereto as Exhibit B as the basis for negotiation of the New License Agreement.

8. MOU Binding Effect; Representation of Authority. This MOU is only binding between the Parties regarding the matters expressly stated herein and shall not operate as a license agreement between AT&T and County. AT&T and County each individually represent and warrant that this MOU constitutes a legal, valid, binding, and enforceable obligation , and that neither the execution nor performance of this MOU constitutes a breach of any agreement that it has with any third party or violates any law, rule, regulation, or duty arising in law or equity applicable to the subject matter of this MOU. Each Party further individually represents and warrants that execution of this MOU is within its legal powers, and each individual executing this MOU on its behalf is duly authorized by all necessary and appropriate action to do so on behalf of that Party and does so with full legal authority.

9. Liability for the AT&T Work; Sovereign Immunity. AT&T is solely responsible and liable for all matters associated with the performance of the AT&T Work, including the retention of vendors/contractors, obtaining necessary insurance, and for any claims of any kind arising out of or relating to the AT&T Work. AT&T holds harmless and agrees to indemnify County and its current, past, and future officers, agents, servants, and employees from any claims, losses, and liabilities of any kind or nature associated with AT&T's performance of the AT&T Work. Except to the extent sovereign immunity may be deemed to be waived by entering into this MOU, nothing herein is intended to serve as a waiver of sovereign immunity by County nor shall anything included herein be construed as consent by County to be sued by third parties in any matter arising out of this MOU. County is a political subdivision as defined in Section 768.28, Florida Statutes, and shall be responsible for the negligent or wrongful acts or omissions of its employees pursuant to Section 768.28, Florida Statutes.

10. Resolution of Dispute. Upon the completion of the AT&T Work, County's payment of its portion thereof, and the Parties entering into the New License Agreement, AT&T and County each hereby waive and release any claims that they may have against each other or their respective current, past, and future officers, agents, servants, and employees relating, directly or indirectly, to the location or relocation of AT&T's property from the AT&T Spaces, any claims that AT&T may have to a lease of the AT&T Spaces, and any other contractual claims between the Parties regarding the Agreements. The foregoing release by AT&T includes any claims it may have against SMG relating to the Agreements. Notwithstanding the foregoing, nothing in this MOU shall in any way act to waive or release any rights or claims that County may have against SMG (or its successor, ASM Global) for any matters relating to the Agreements, the amounts paid (or abated) by County under this MOU, or the obligations in this MOU.

11. Amendments. No modification, amendment, or alteration in the terms or conditions contained in this MOU shall be effective unless contained in a written document prepared with the

same or similar formality as this MOU and executed by duly authorized representatives of County and AT&T.

12. Prior Agreements. This MOU represents the final and complete understanding of the Parties regarding the subject matter and supersedes all prior and contemporaneous negotiations and discussions regarding that subject matter. There is no commitment, agreement, or understanding concerning the subject matter of this MOU that is not contained in this written document, except for the additional terms contained in the subsequent New License Agreement.

13. Counterparts; Multiple Originals; and Digital Signatures. This MOU may be executed in multiple originals, and may be executed in counterparts, each of which shall be deemed to be an original, but all of which, taken together, shall constitute one and the same agreement. Each of the Parties agrees that this MOU may be signed digitally (e.g., DocuSign, etc.).

(The remainder of this page is intentionally blank)

IN WITNESS WHEREOF, the Parties hereto have made and executed this Memorandum of Understanding: BROWARD COUNTY, through its BOARD OF COUNTY COMMISSIONERS, signing by and through its Mayor or Vice-Mayor authorized to execute same by Board action on the _____ day of _____, 20__, and New Cingular Wireless PCS, LLC, signing by and through its Area Manager duly authorized to execute same.

COUNTY

ATTEST:

_____
Broward County Administrator, as
ex officio Clerk of the Broward County
Board of County Commissioners

BROWARD COUNTY, by and through
its Board of County Commissioners

By: _____
20th day of February, 2020

Approved as to form by
Andrew J. Meyers
Broward County Attorney
Governmental Center, Suite 423
115 South Andrews Avenue
Fort Lauderdale, Florida 33301
Telephone: (954) 357-7600
Telecopier: (954) 357-7641

By: _____ 2/19/2020
Nathaniel A. Klitsberg (Date)
Senior Assistant County Attorney

By: _____ 2/20/2020
Michael J. Kerr (Date)
Deputy County Attorney

NAK
2020-02-05 Broward County ATT MOU re Convention Center Clean v3
02/12/2020
#493451v3

MEMORANDUM OF UNDERSTANDING BETWEEN NEW CINGULAR WIRELESS PCS, LLC AND BROWARD COUNTY REGARDING MICROCELL FACILITY AND MACRO LEASE

WITNESSES:

Signature

Debbie Lewis
Print Name of Witness above

Signature

Blair Ellenberger
Print Name of Witness above

NEW CINGULAR WIRELESS PCS, LLC

By: _____
Authorized Signor

John F. Heddy, Area Manager
Print Name and Title

17th day of Feb, 2020

ATTEST:

Kathy Porter
Corporate Secretary or other person authorized to attest

Notary Public State of Florida
Kathy A Porter
My Commission GG 294555
Expires 03/04/2023

(CORPORATE SEAL OR NOTARY)

Exhibit A
Construction Drawing

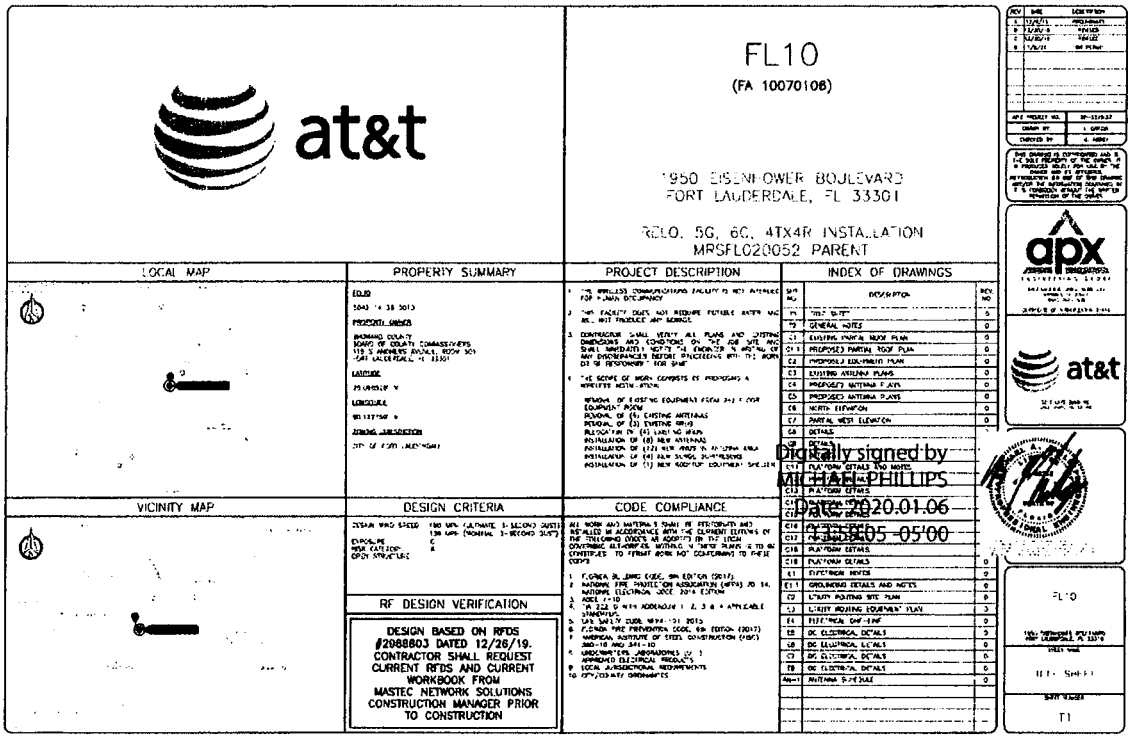

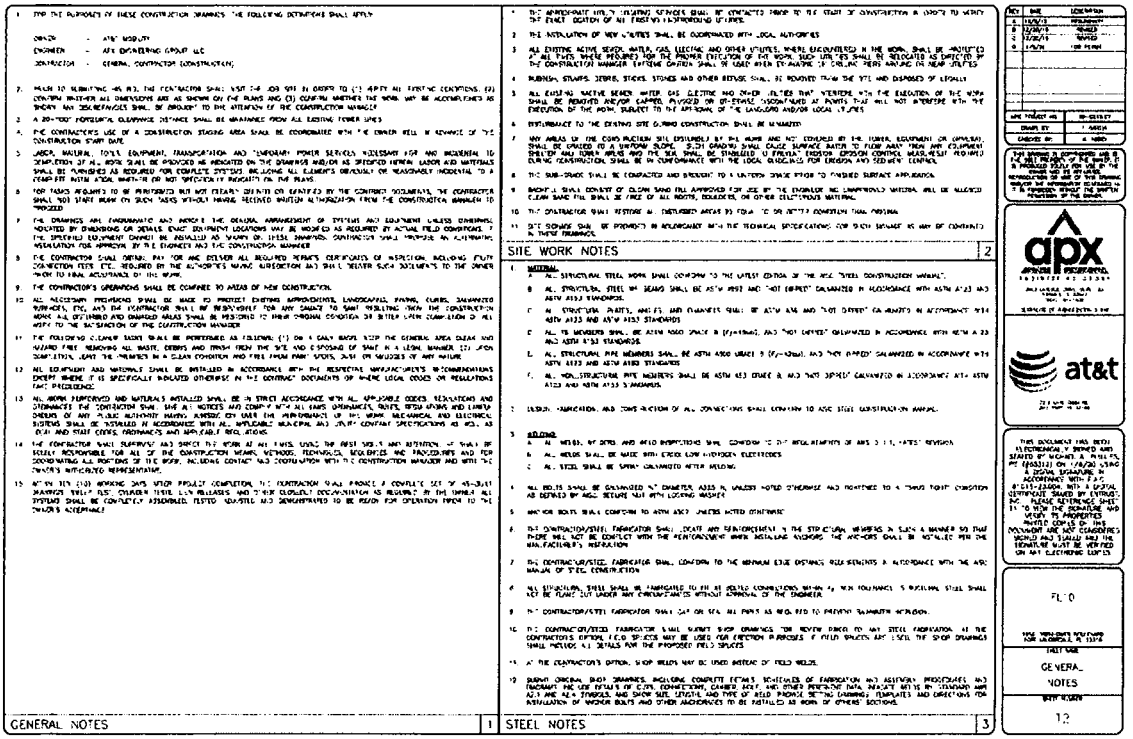

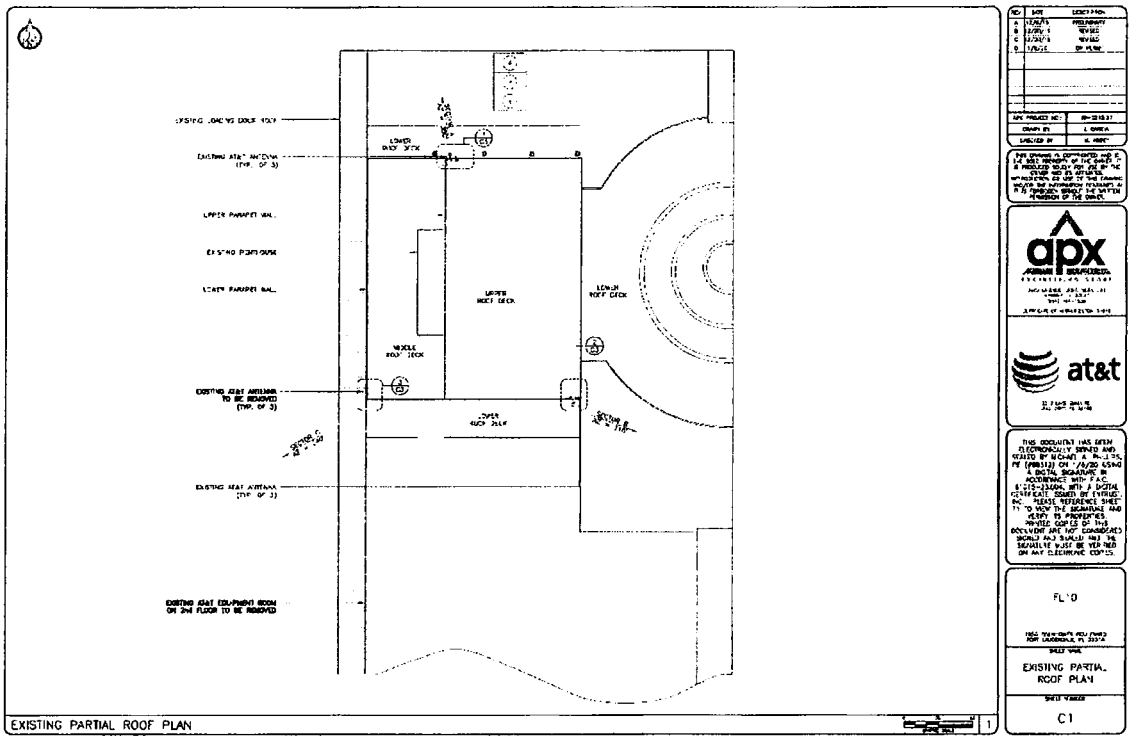
EXISTING PARTIAL ROOF PLAN
apx
at&t
FL'D
EXISTING PARTIAL ROOF PLAN
C1

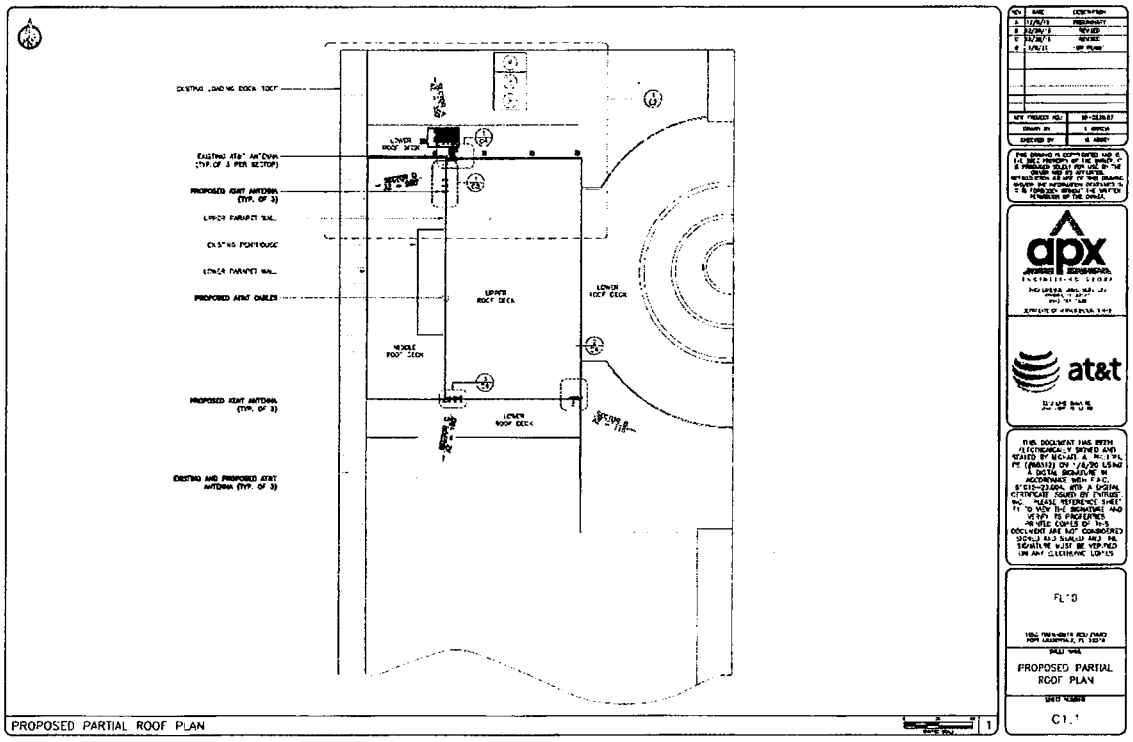
PROPOSED PARTIAL ROOF PLAN
apx
at&t
FL'D
PROPOSED PARTIAL ROOF PLAN
C1.1

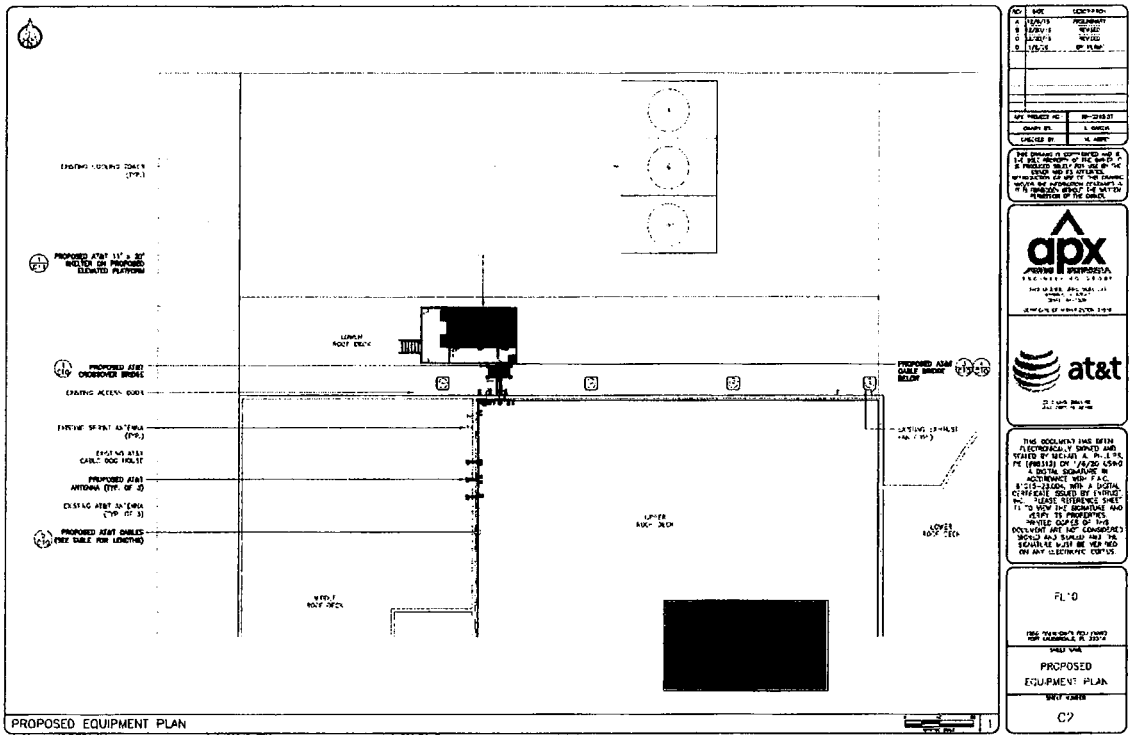
PROPOSED EQUIPMENT PLAN
apx
at&t
PROPOSED
EQUIPMENT PLAN
C2

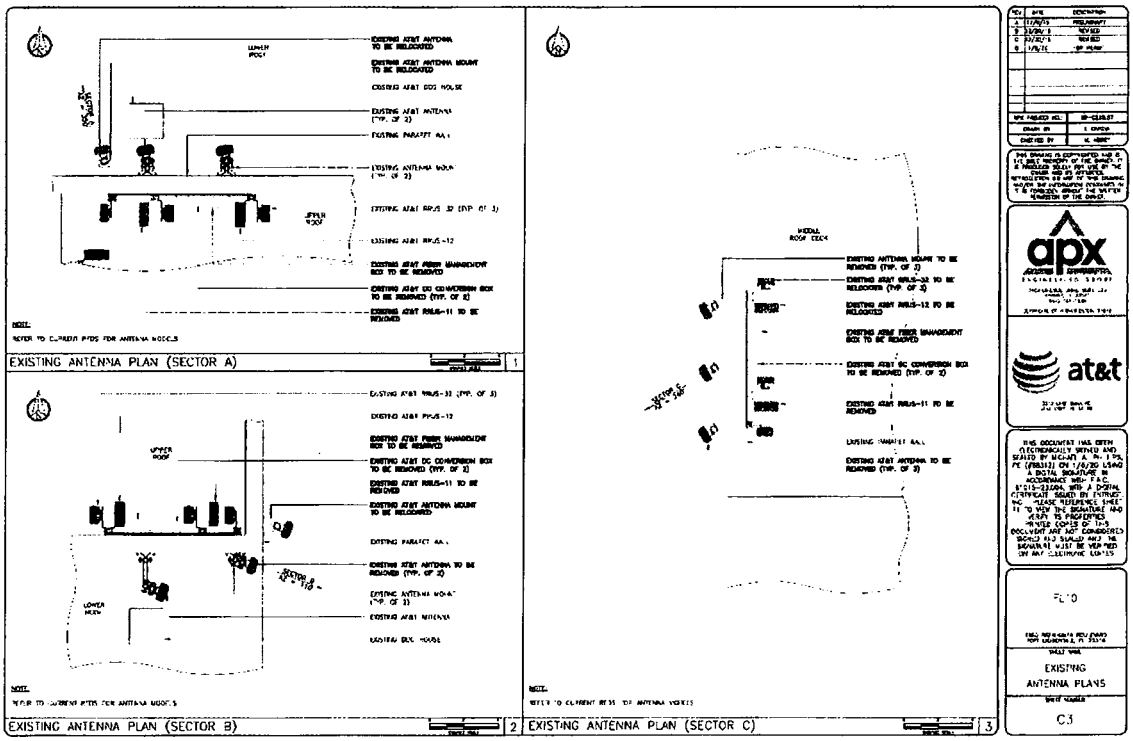
EXISTING ANTENNA PLAN (SECTOR A)
EXISTING ANTENNA PLAN (SECTOR B)
EXISTING ANTENNA PLAN (SECTOR C)
apx
at&t
EXISTING
ANTENNA PLANS
C3

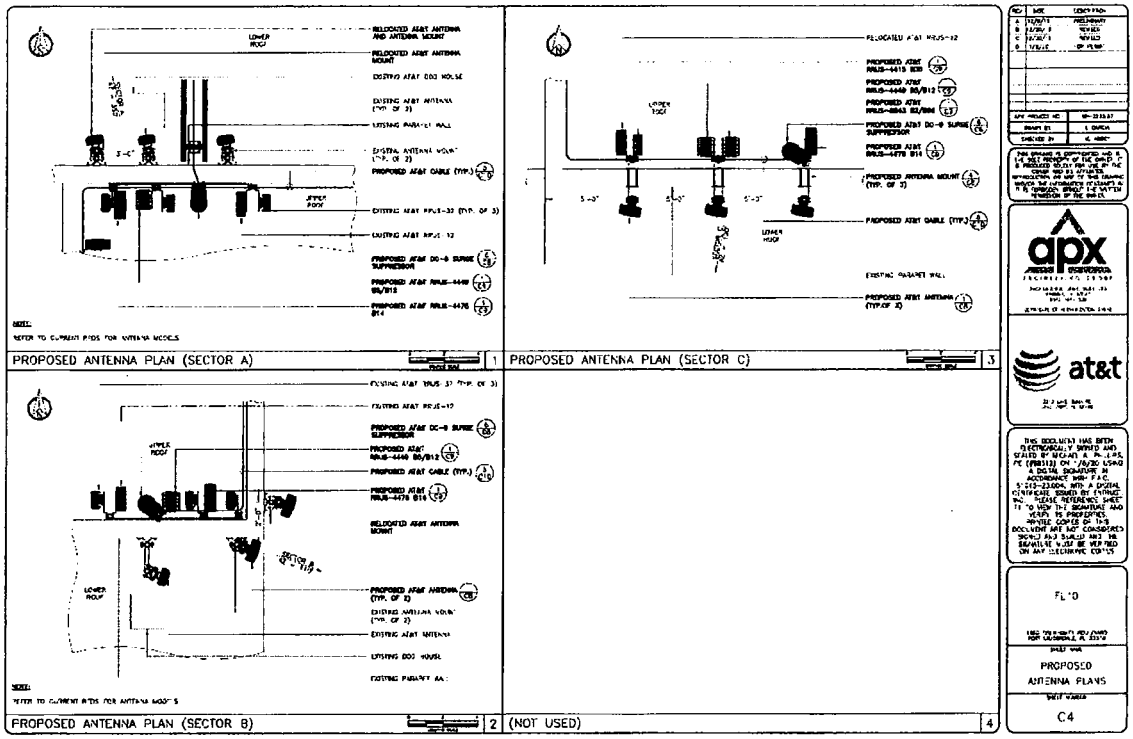
PROPOSED ANTENNA PLAN (SECTOR A)
PROPOSED ANTENNA PLAN (SECTOR C)
PROPOSED ANTENNA PLAN (SECTOR B)
(NOT USED)
PROPOSED ANTENNA PLANS
C4

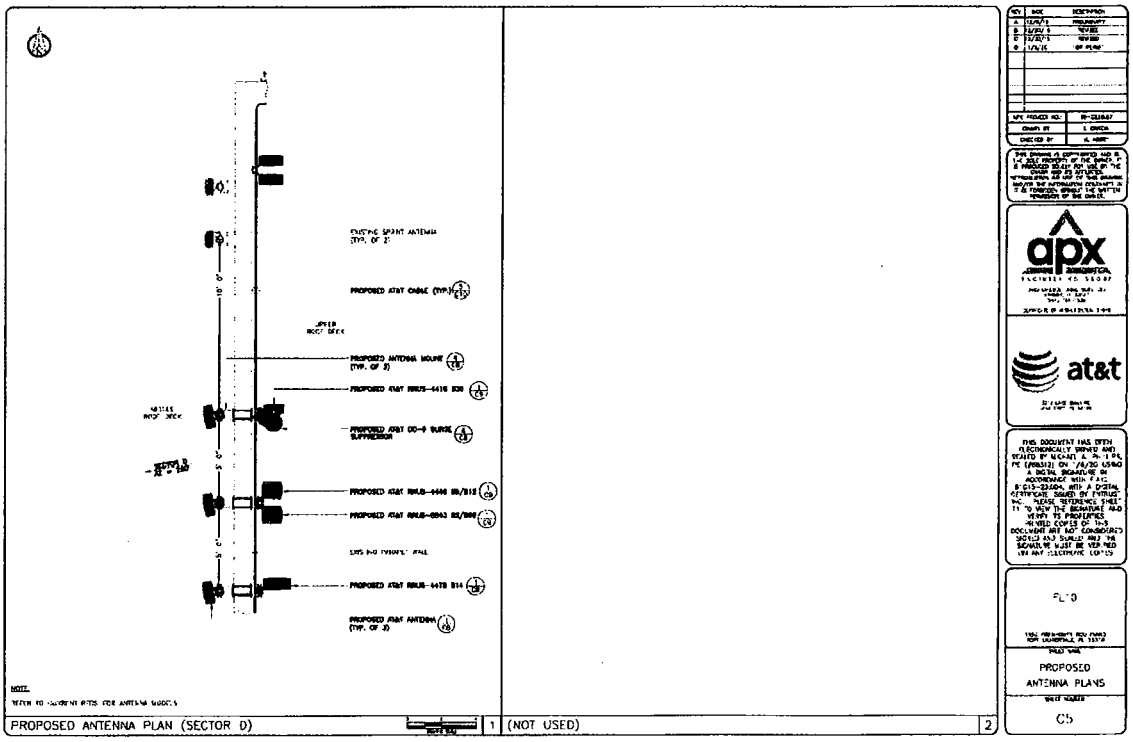
PROPOSED ANTENNA PLAN (SECTOR D)
(NOT USED)
PROPOSED ANTENNA PLANS
C5

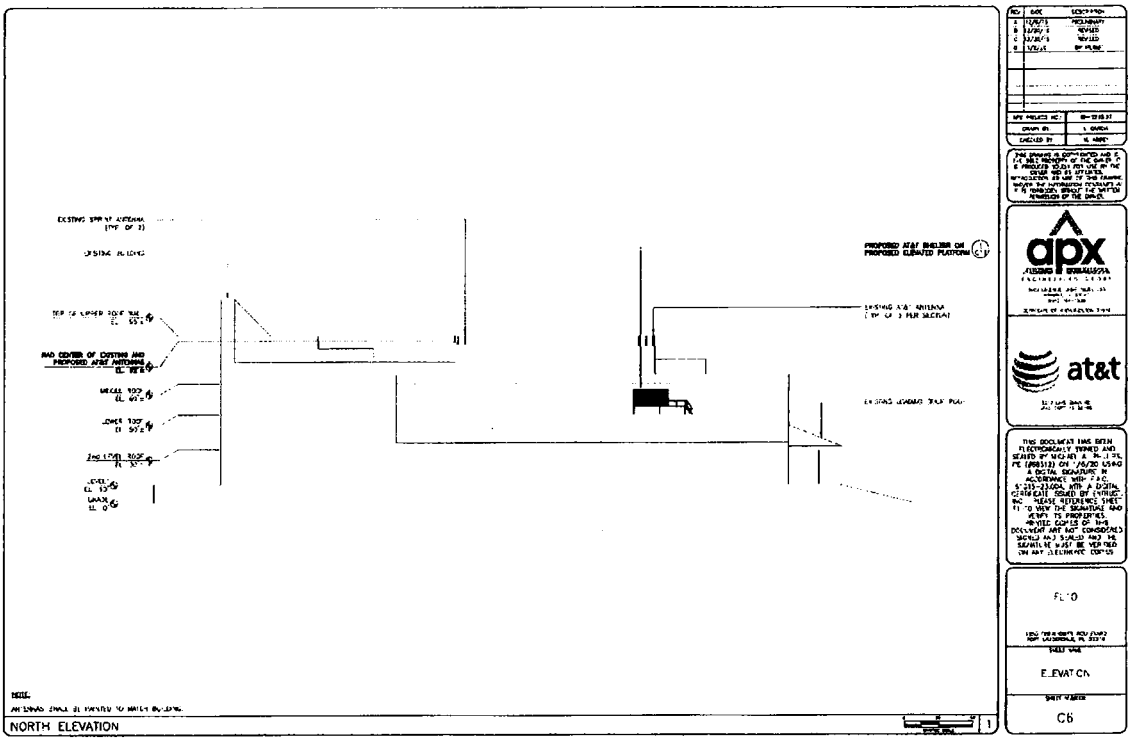
NORTH ELEVATION
apx
at&t
ELEVATION
C6

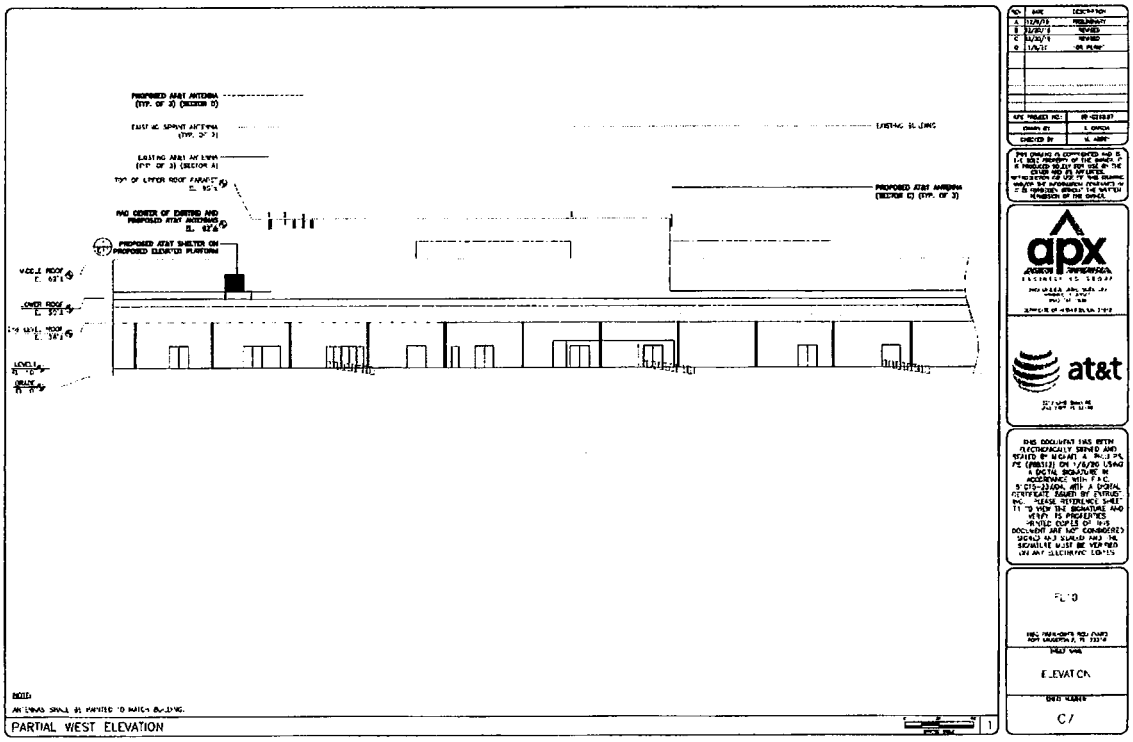
PARTIAL WEST ELEVATION
apx
at&t
ELEVATION
C7

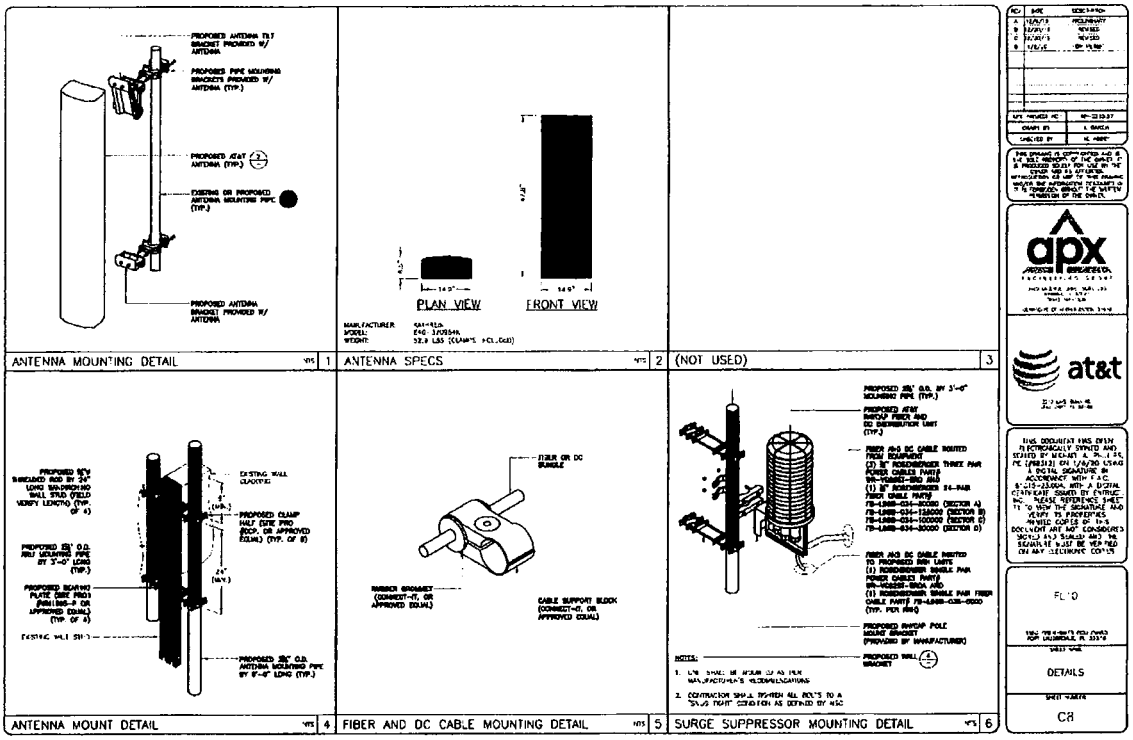
ANTENNA MOUNTING DETAIL
ANTENNA SPECS
PLAN VIEW
FRONT VIEW
(NOT USED)
ANTENNA MOUNT DETAIL
FIBER AND DC CABLE MOUNTING DETAIL
SURGE SUPPRESSOR MOUNTING DETAIL
apx
at&t
DETAILS
C8

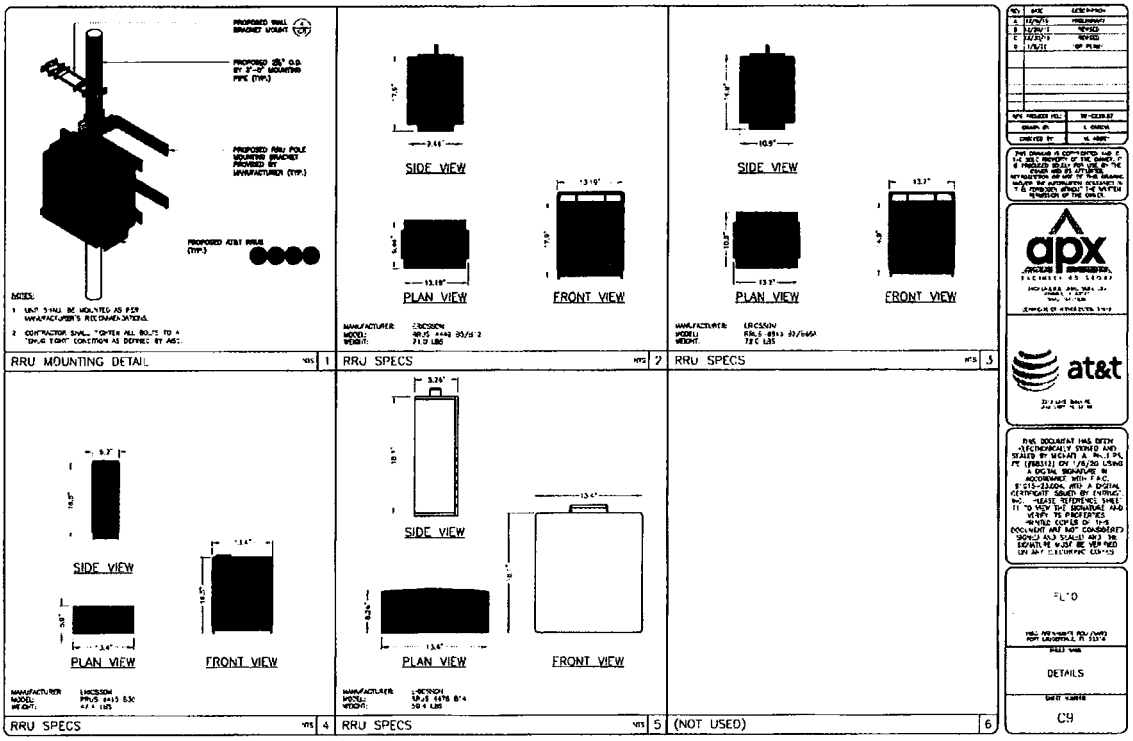
RRU MOUNTING DETAIL
RRU SPECS
SIDE VIEW
PLAN VIEW
FRONT VIEW
RRU SPECS
SIDE VIEW
PLAN VIEW
FRONT VIEW
RRU SPECS
SIDE VIEW
PLAN VIEW
FRONT VIEW
RRU SPECS
SIDE VIEW
PLAN VIEW
FRONT VIEW
(NOT USED)
apx
at&t
DETAILS
C9

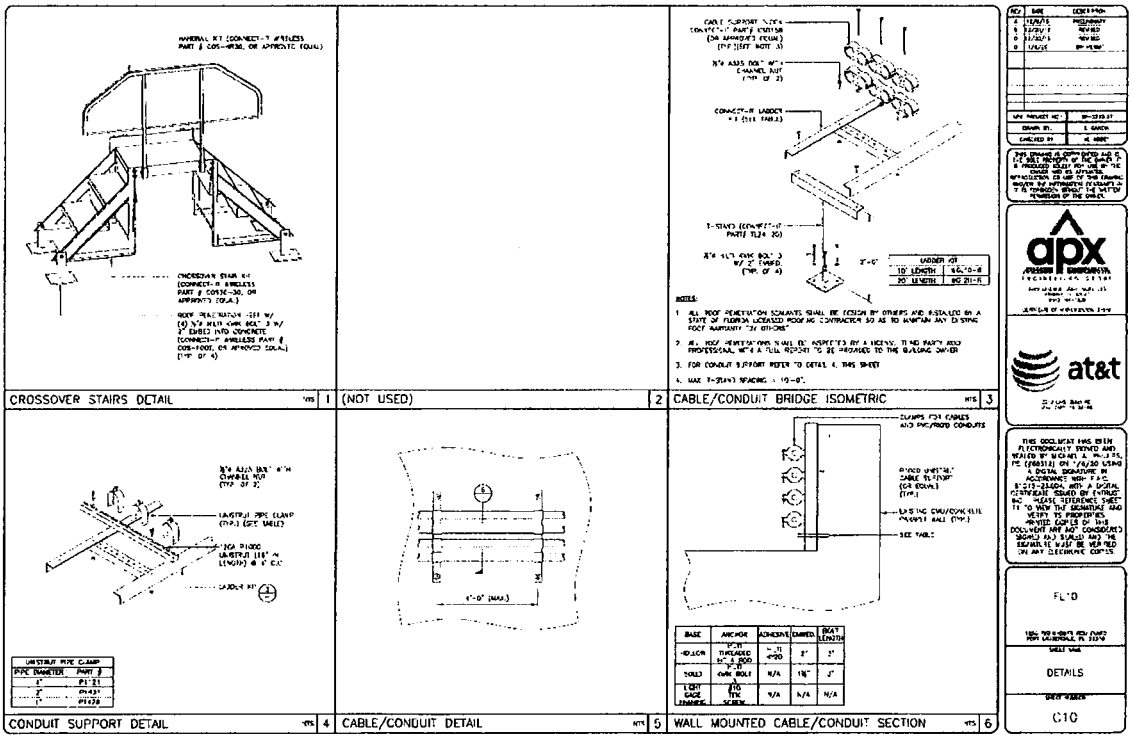
CROSSOVER STAIRS DETAIL
(NOT USED)
CABLE/CONDUIT BRIDGE ISOMETRIC
CONDUIT SUPPORT DETAIL
CABLE/CONDUIT DETAIL
WALL MOUNTED CABLE/CONDUIT SECTION
DETAILS
C10

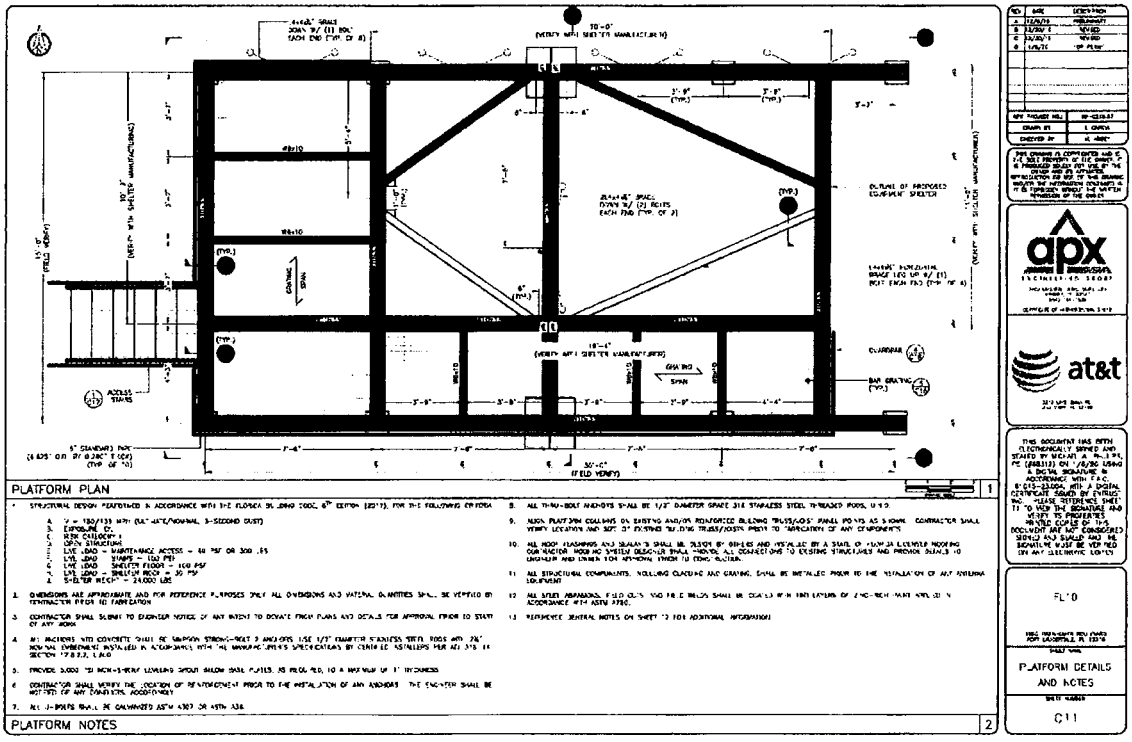
PLATFORM PLAN
PLATFORM NOTES
PLATFORM DETAILS AND NOTES
C11

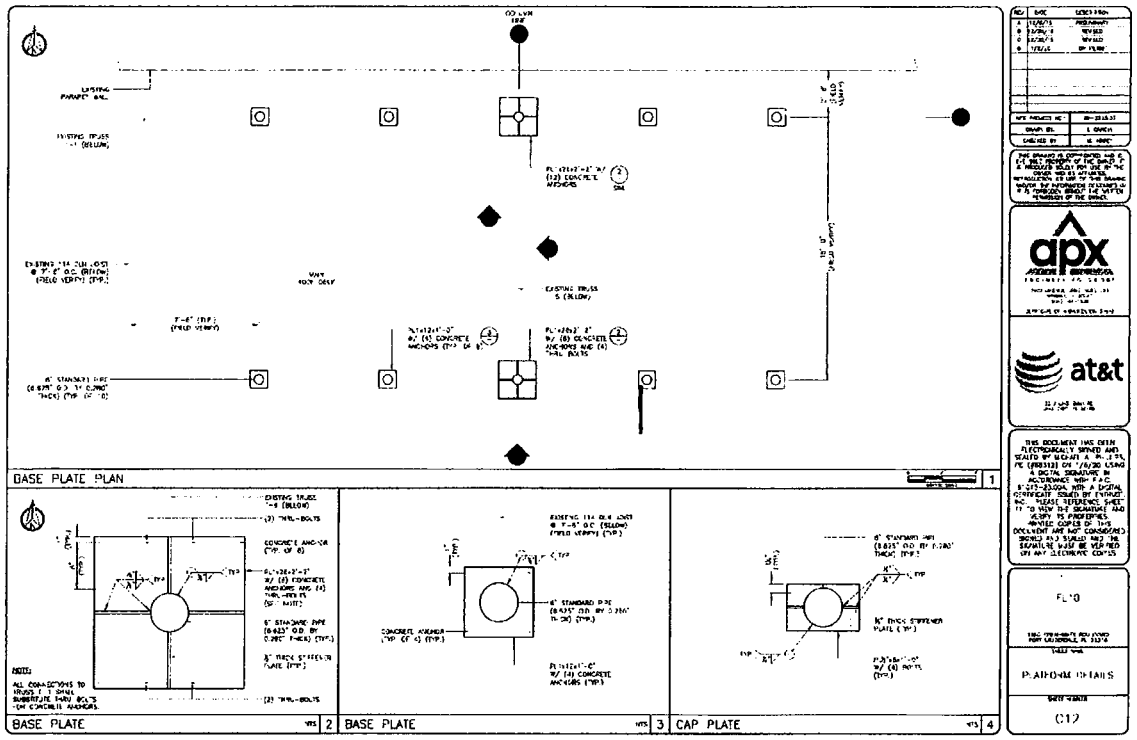
BASE PLATE PLAN
BASE PLATE
BASE PLATE
CAP PLATE
PLATFORM DETAILS
C12

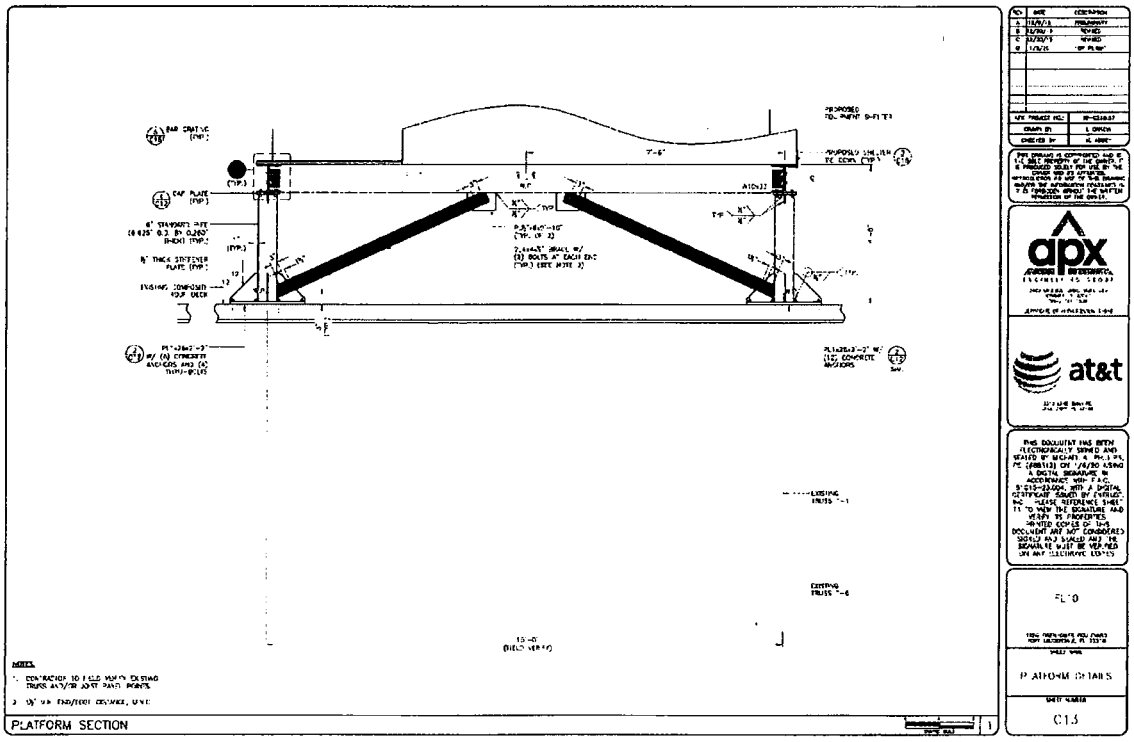
PLATFORM SECTION
PLATFORM DETAILS
C13

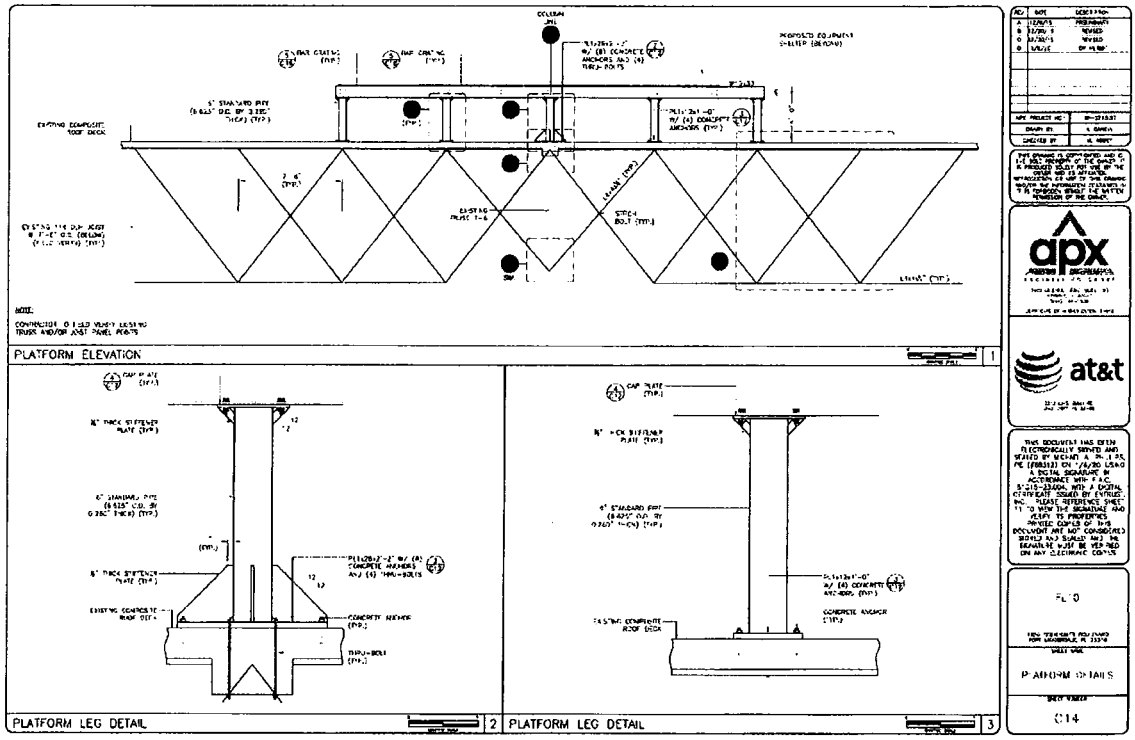
PLATFORM ELEVATION
PLATFORM LEG DETAIL
PLATFORM LEG DETAIL
at&t
C14

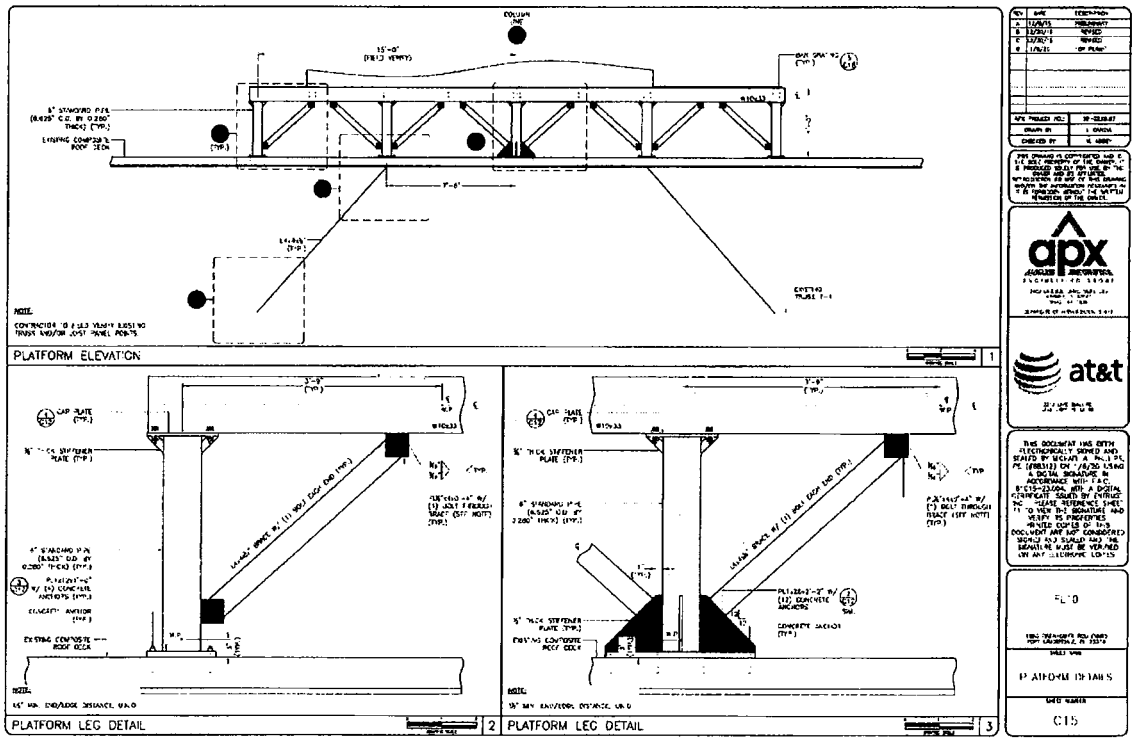
PLATFORM ELEVATION
PLATFORM LEG DETAIL
PLATFORM LEG DETAIL
at&t
C15

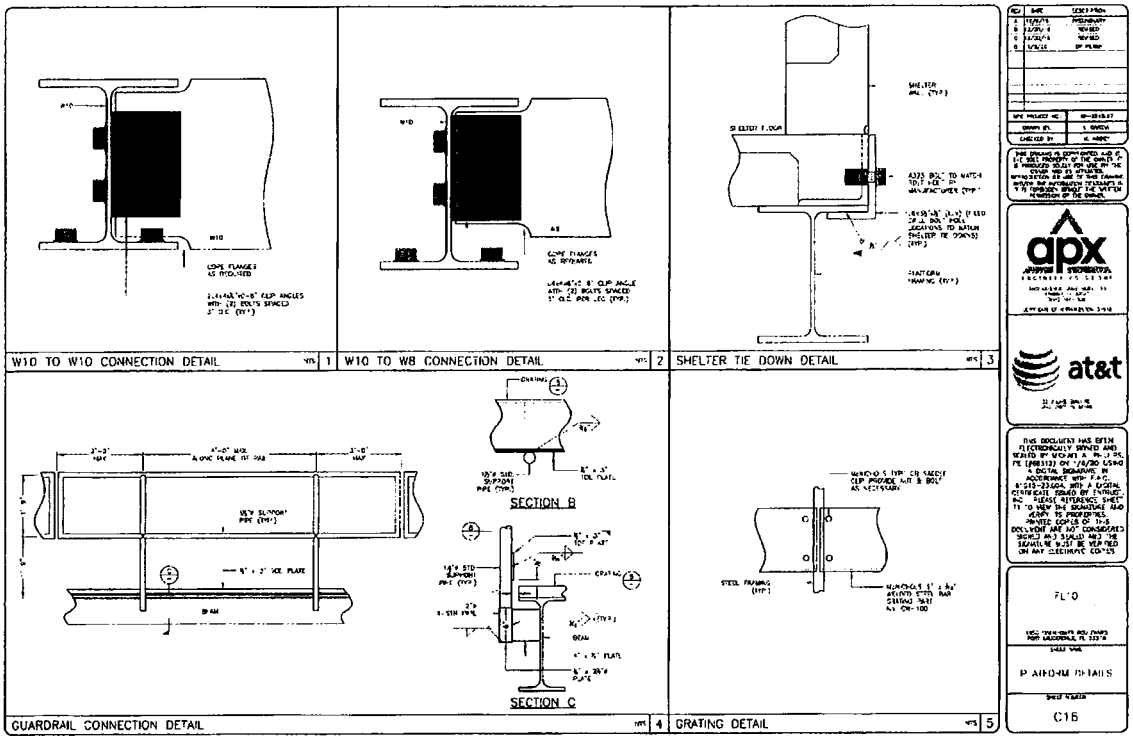
W10 TO W10 CONNECTION DETAIL
W10 TO W8 CONNECTION DETAIL
SHELTER TIE DOWN DETAIL
SECTION B
SECTION C
GUARDRAIL CONNECTION DETAIL
GRATING DETAIL
apx
at&t
PLATFORM DETAILS
C16

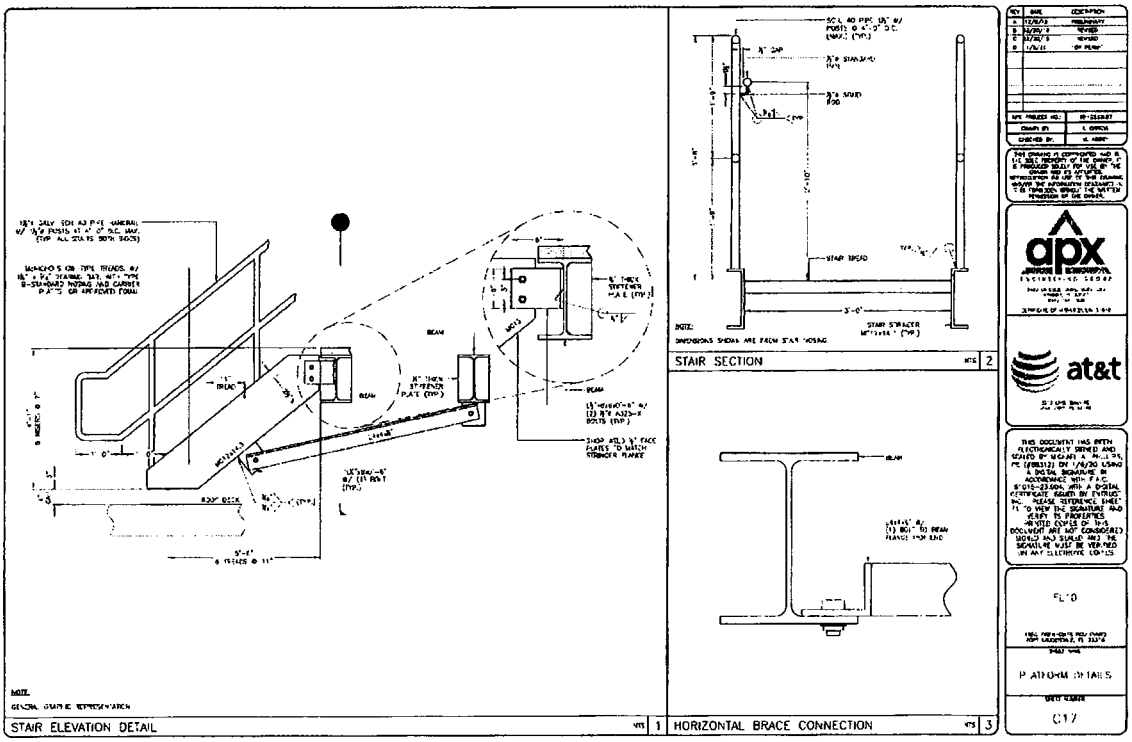
STAIR ELEVATION DETAIL
STAIR SECTION
HORIZONTAL BRACE CONNECTION
apx
at&t
PLATFORM DETAILS
C17

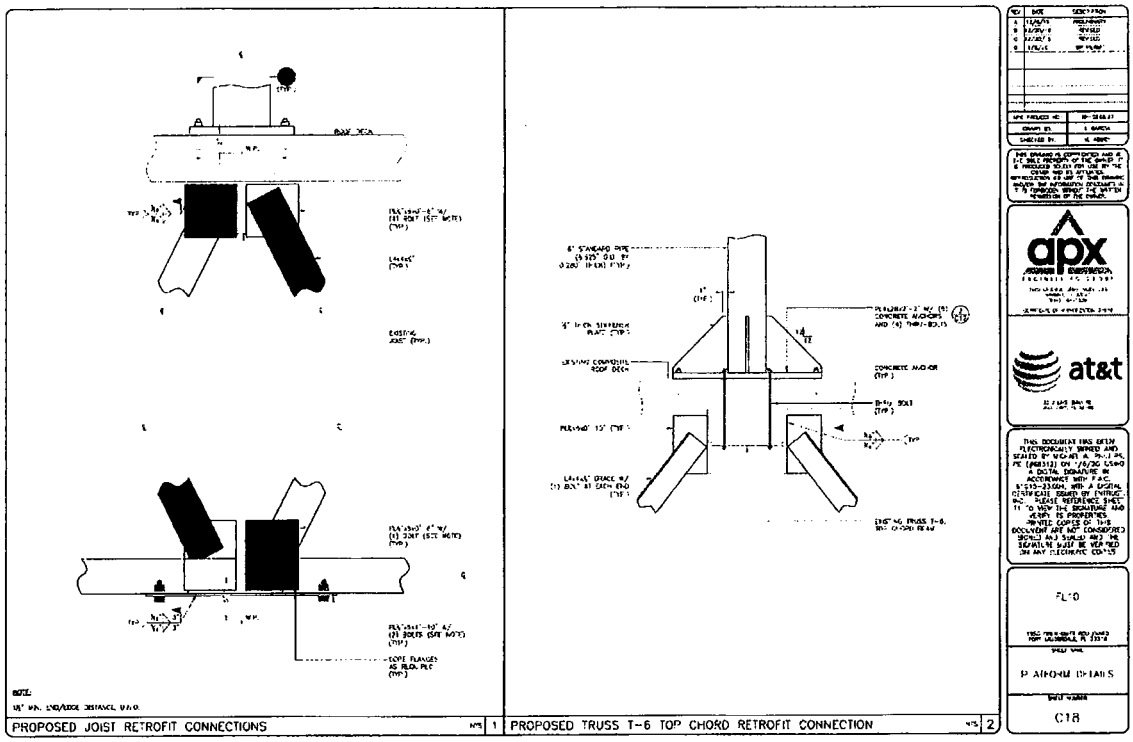
PROPOSED JOIST RETROFIT CONNECTIONS
PROPOSED TRUSS T-6 TOP CHORD RETROFIT CONNECTION
apx
at&t
P AIRCRAFT DETAILS
C18

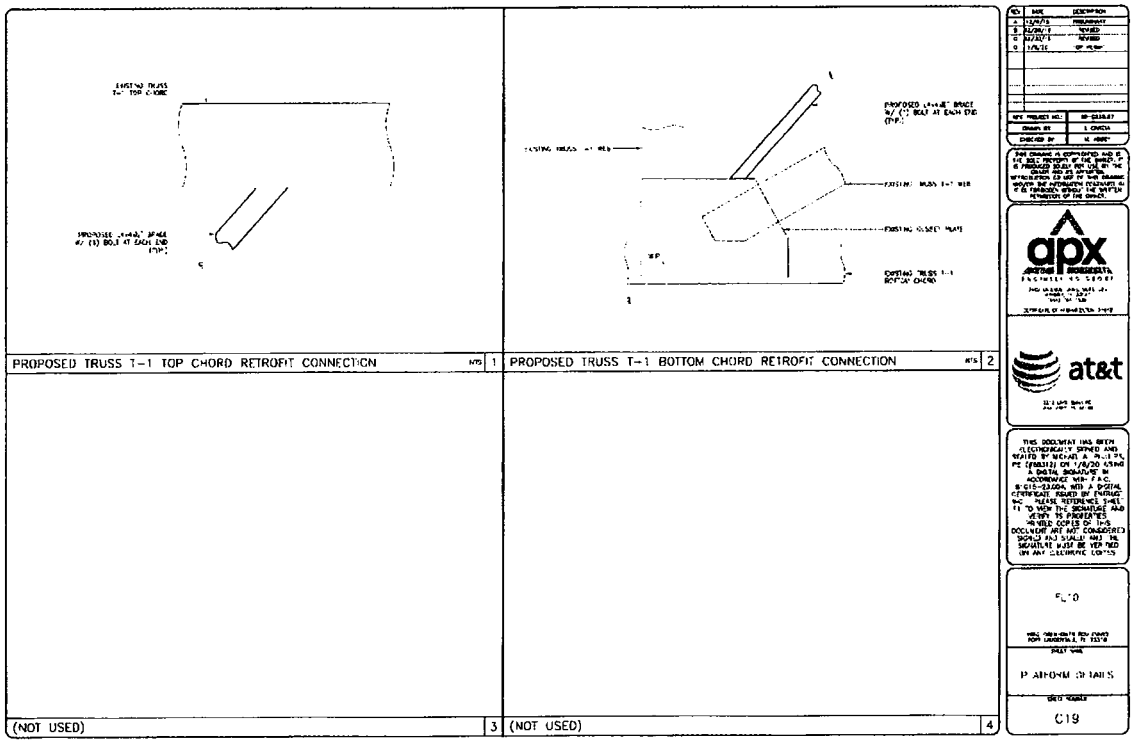
PROPOSED TRUSS T-1 TOP CHORD RETROFIT CONNECTION
PROPOSED TRUSS T-1 BOTTOM CHORD RETROFIT CONNECTION
(NOT USED)
(NOT USED)
apx
at&t
P AIRCRAFT DETAILS
C19

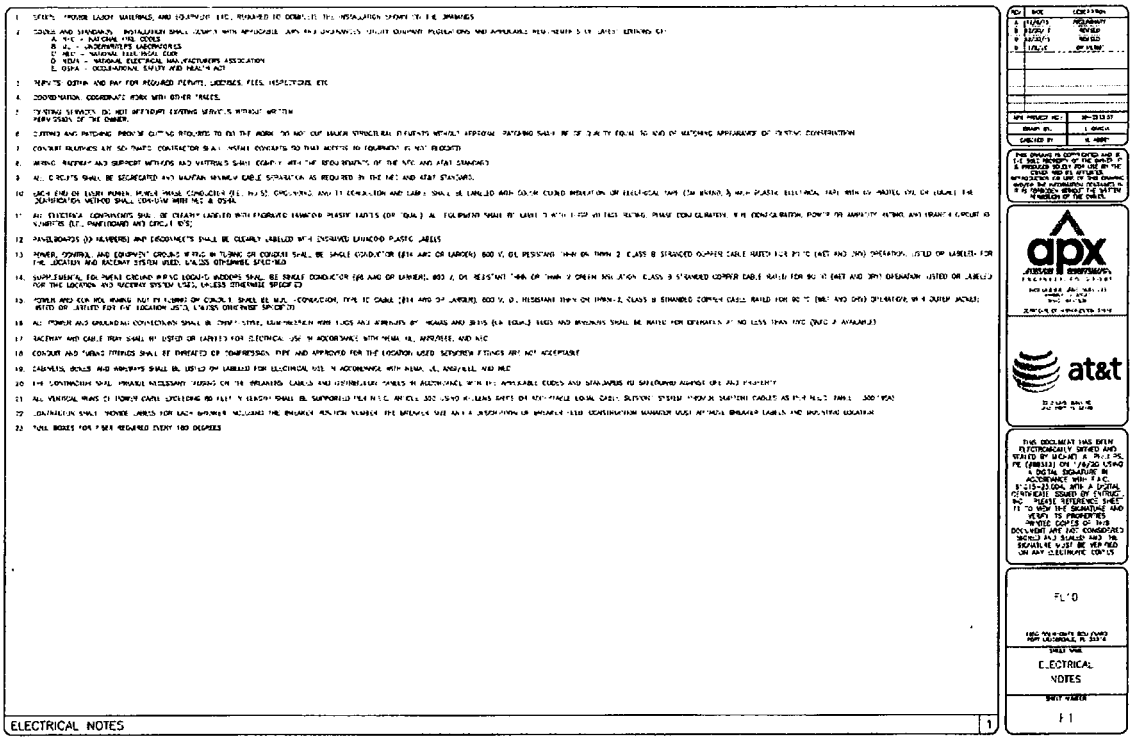
ELECTRICAL NOTES
1
FL'D
ELECTRICAL NOTES
E1

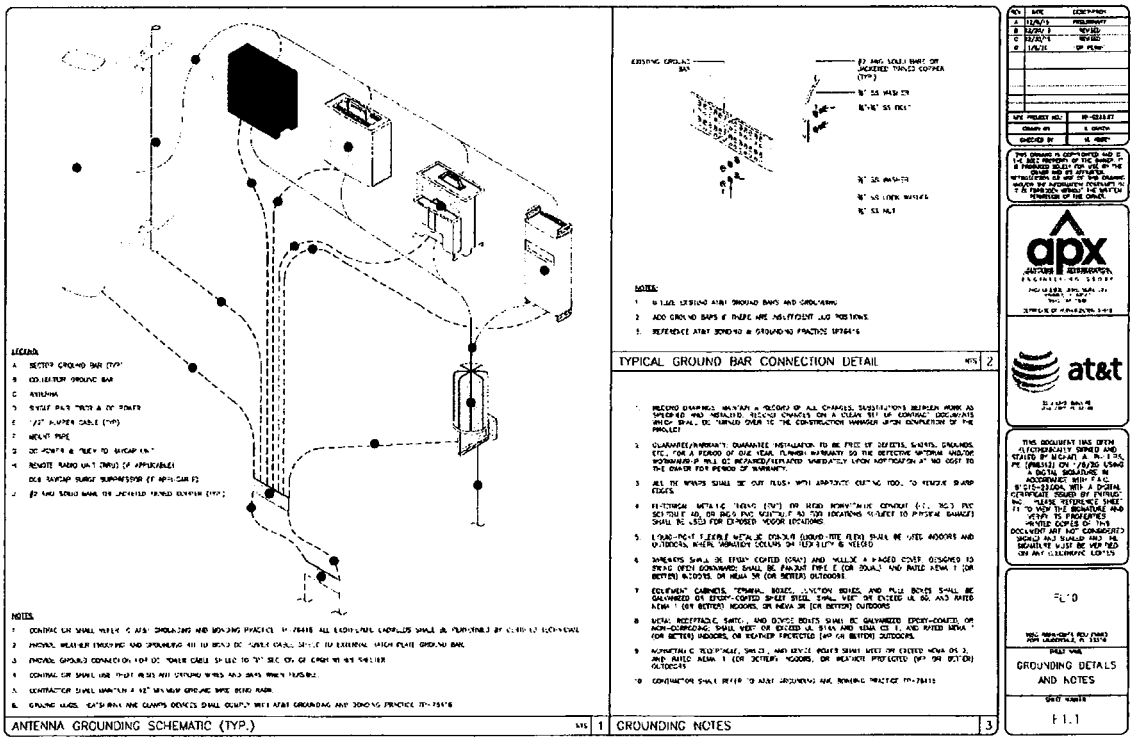
TYPICAL GROUND BAR CONNECTION DETAIL
2
ANTENNA GROUNDING SCHEMATIC (TYP.)
1
GROUNDING NOTES
3
FL'D
GROUNDING DETAILS AND NOTES
E1.1

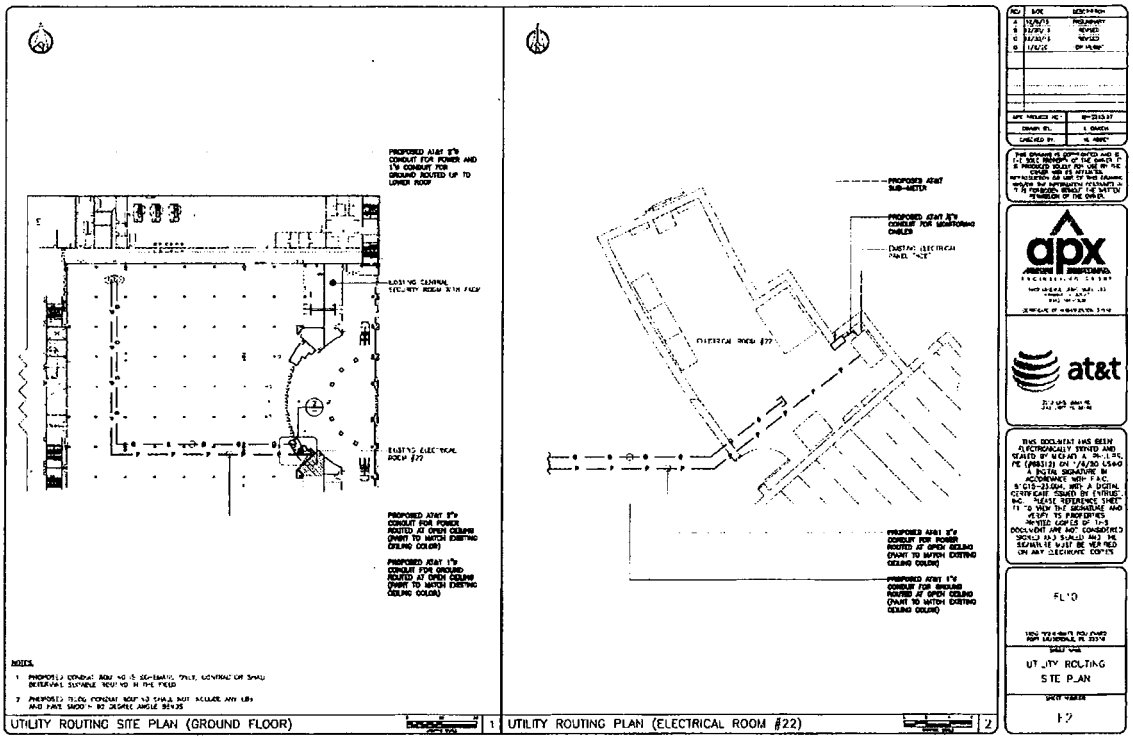
UTILITY ROUTING SITE PLAN (GROUND FLOOR)
UTILITY ROUTING PLAN (ELECTRICAL ROOM #22)
apx
at&t
UTILITY ROUTING SITE PLAN

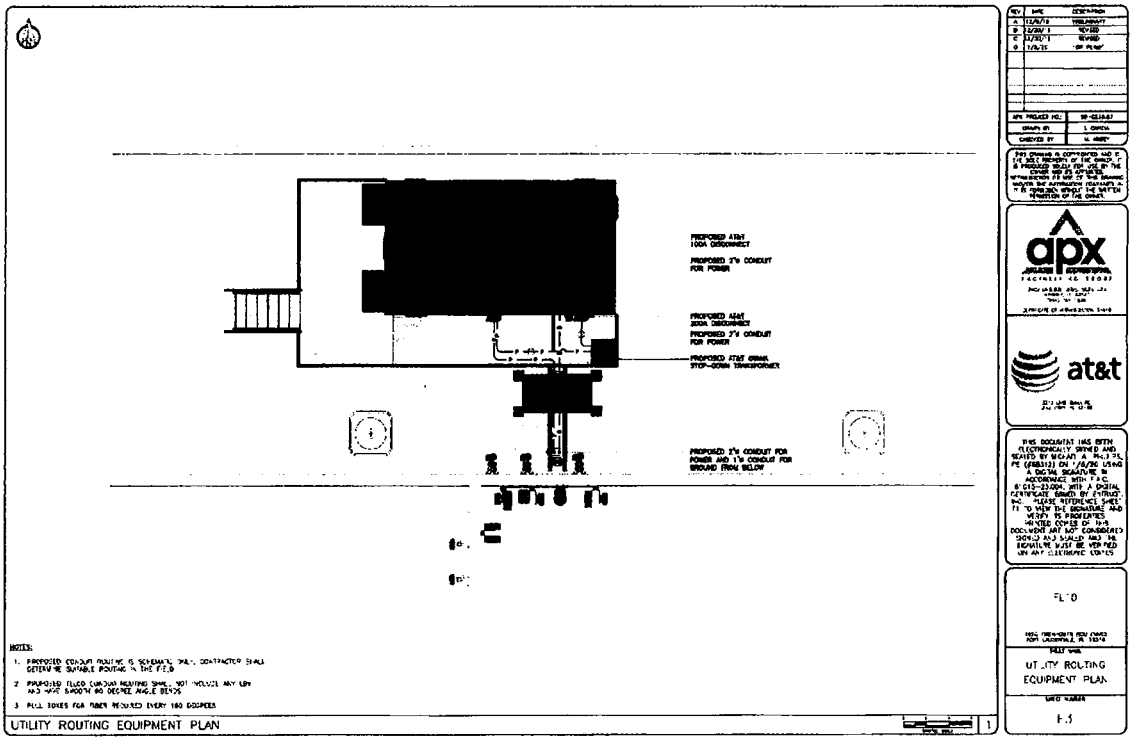
UTILITY ROUTING EQUIPMENT PLAN
apx
at&t
UTILITY ROUTING EQUIPMENT PLAN

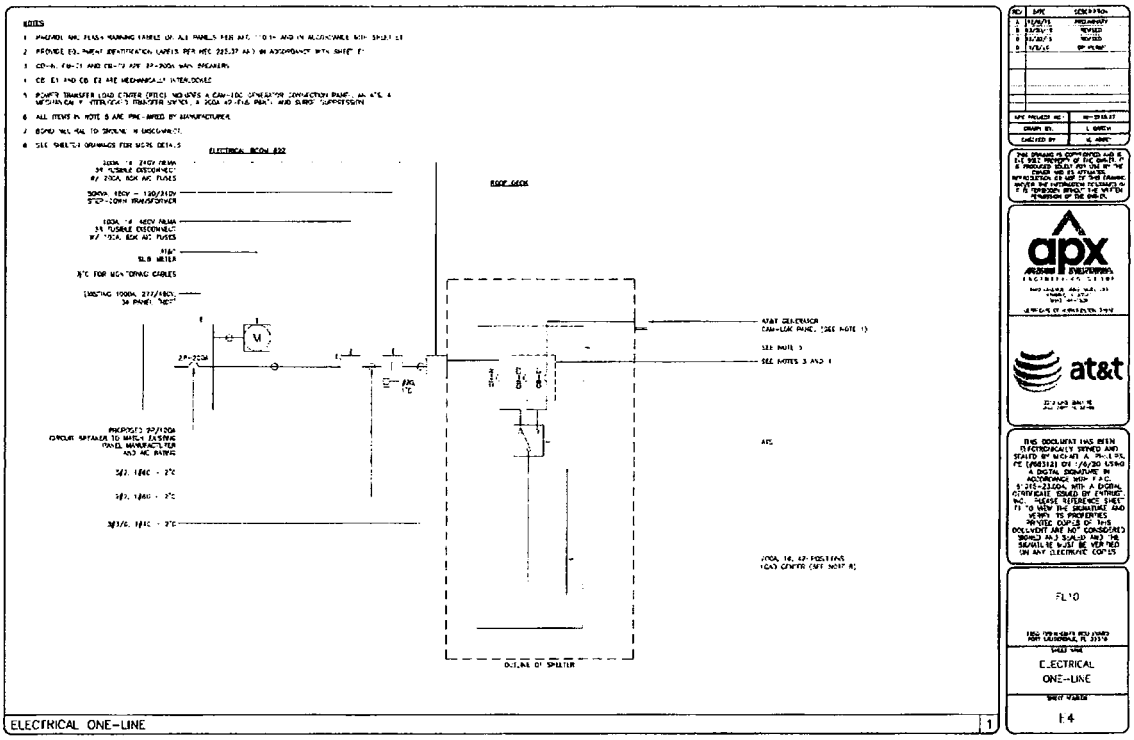
ELECTRICAL ONE-LINE
ELECTRICAL ONE-LINE

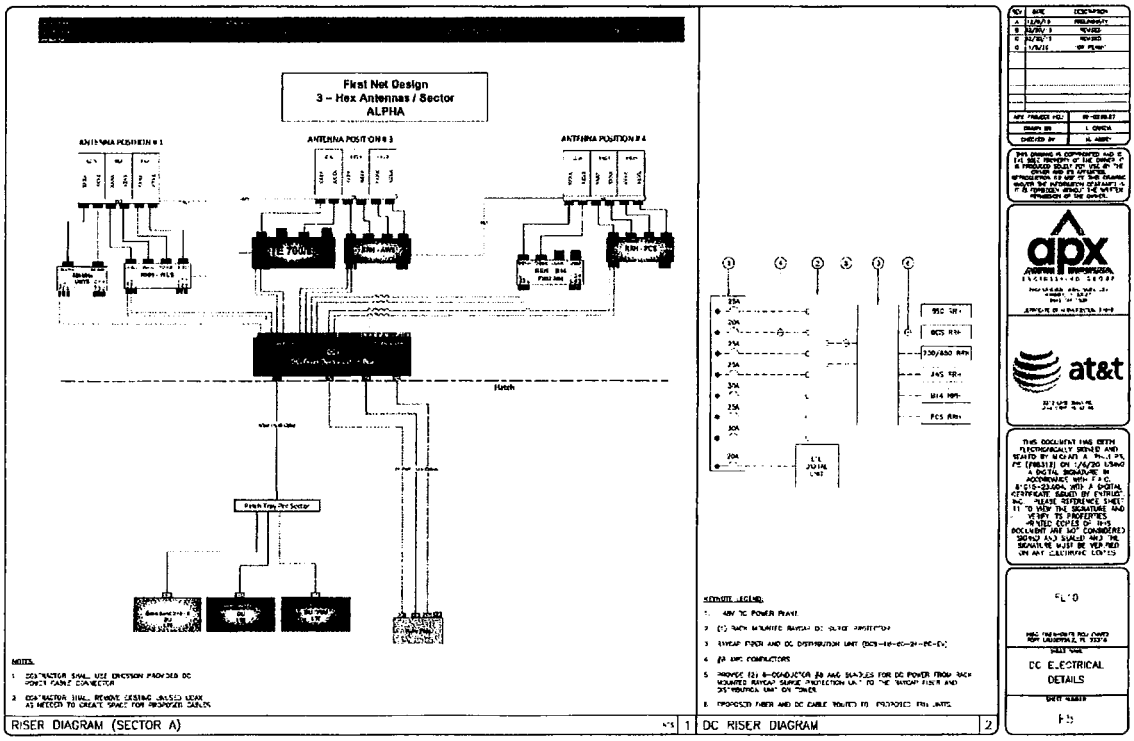
First Net Design
3 – Hex Antennas / Sector
ALPHA
ANTENNA POSITION # 1
ANTENNA POSITION # 3
ANTENNA POSITION # 4
RISER DIAGRAM (SECTOR A)
DC RISER DIAGRAM
DC ELECTRICAL DETAILS

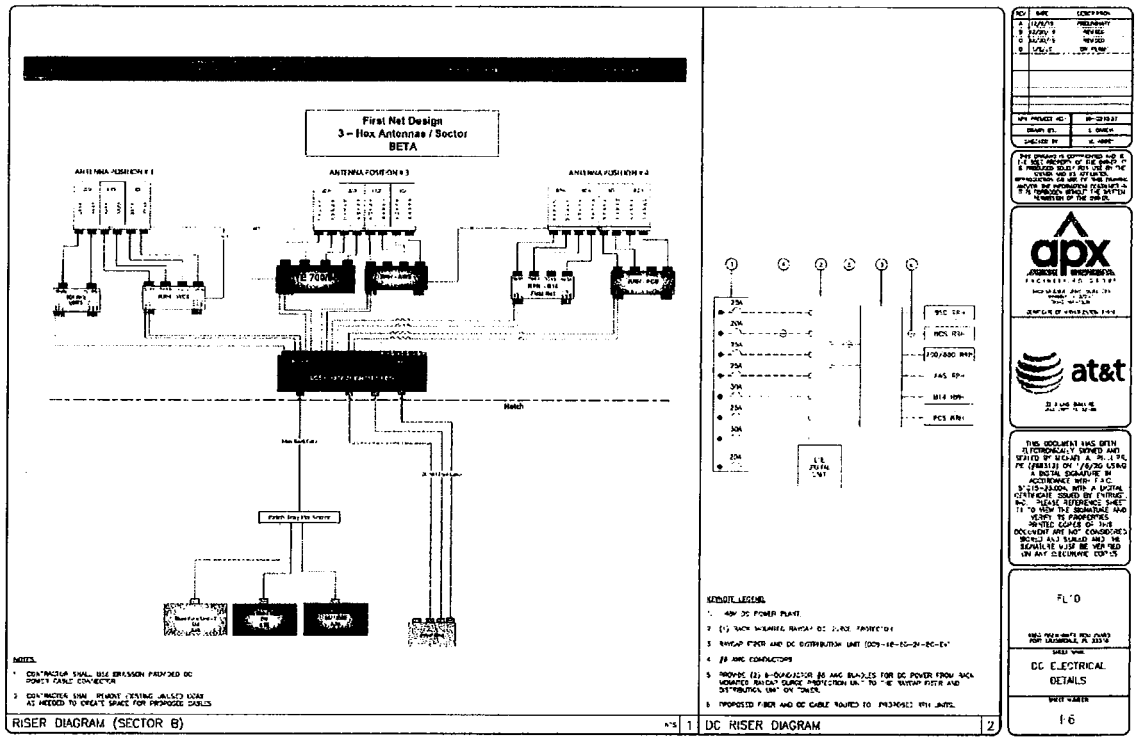
First Net Design
3 – Hex Antennas / Sector
BETA
ANTENNA POSITION # 1
ANTENNA POSITION # 3
ANTENNA POSITION # 4
Notch
RISER DIAGRAM (SECTOR B)
DC RISER DIAGRAM
DC ELECTRICAL DETAILS
E-6

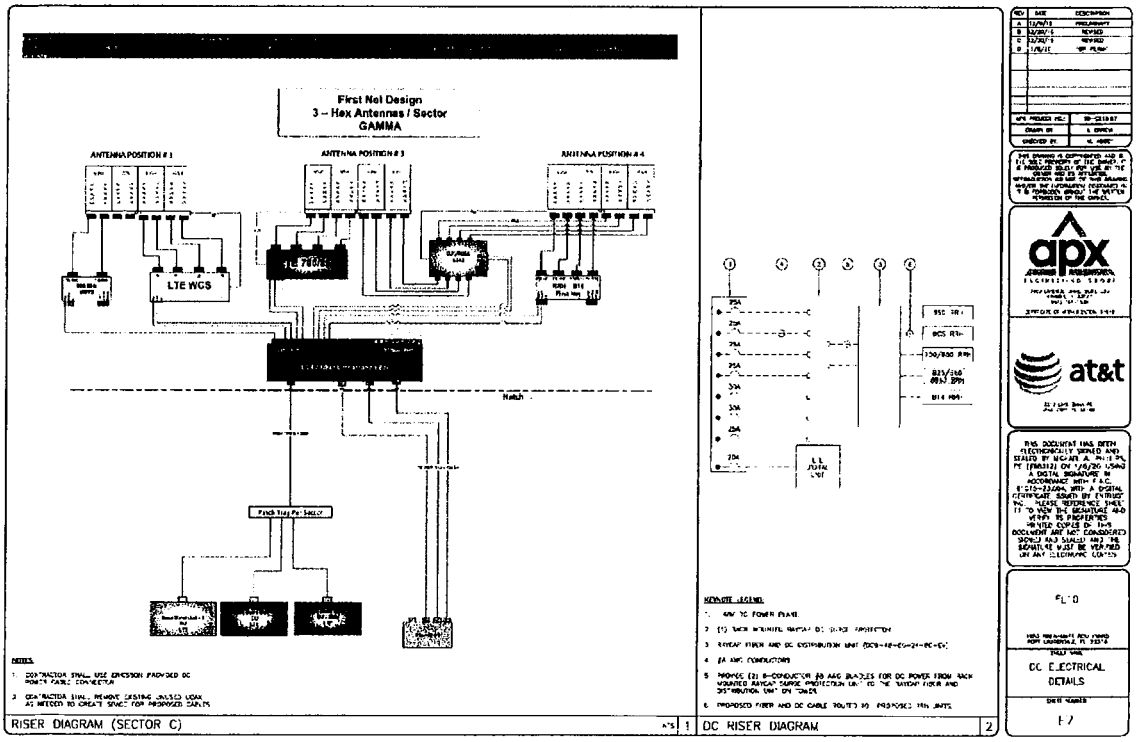
First Net Design
3 – Hex Antennas / Sector
GAMMA
ANTENNA POSITION # 1
ANTENNA POSITION # 3
ANTENNA POSITION # 4
LTE WCS
Notch
RISER DIAGRAM (SECTOR C)
DC RISER DIAGRAM
DC ELECTRICAL DETAILS
E-7

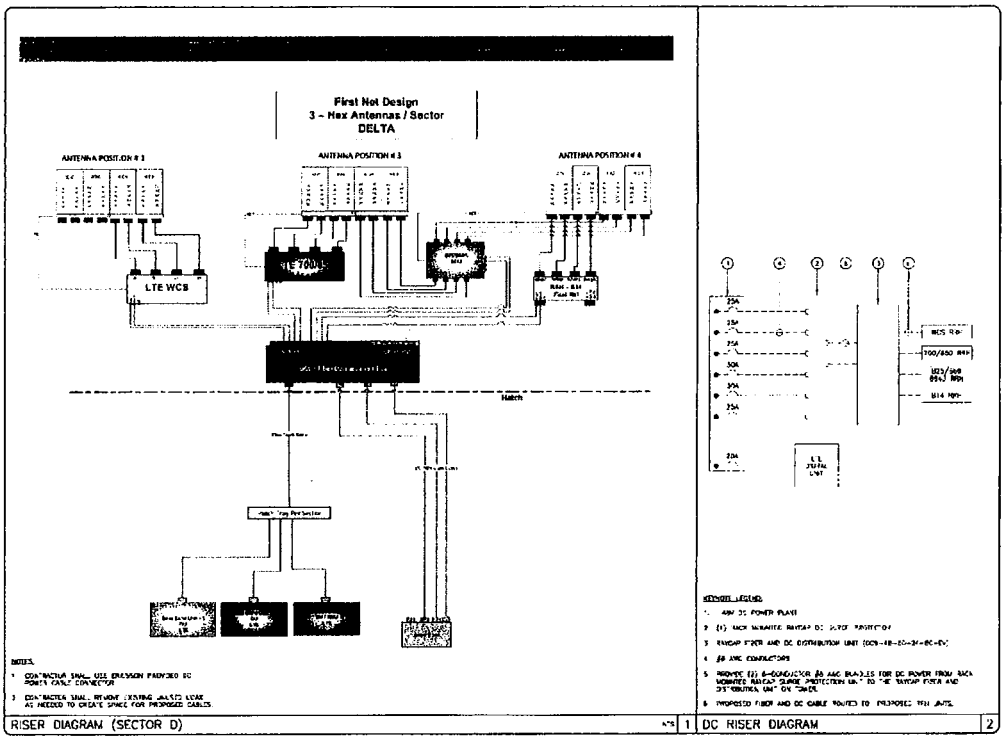

DC / FIBER DEMARCATION BOX							
RAYCAP DC FIBER DEMARCATION BOX				CABLES			
MOUNTING HEIGHT	MODEL	QUANTITY	MODEL	SIZE	QUANTITY	LENGTH PER LINE	
40FT	ECN 48 40 24 DC EV	4	RAYCAPFIBER (TO) PER CABLE HEAD	2/4"	4	(SEE C2)	
			(8) 48 AWG CONNECTORS BRIDGE DC CABLE	2/4"	12	(SEE C2)	

ANTENNA AND COAX SCHEDULE

ANTENNA					CABLES					RRU		TMA		SPLITTER			FILTER	
SECTOR	AZIMUTH	RAD CENTER	ANTENNA MAKE	ANTENNA MODEL	ANTENNA (QTY)	CABLE MODEL	SIZE	# OF CABLES	CABLE LENGTH PER LINE	COLOR CODE	MODEL	QTY.	MODEL	QTY.	MODEL	POWER QUANTITY	GROUND QUANTITY	MODEL	QTY.
A (P-A, A-A)	350°	32'	KMW	ET-X-UW-RR-14-65-18-R-RT	1	HCS/RAYCAP SINGLE RUN DC CABLES (CCN TO RRU)	3/8"	3	12'	1 -RED	RRUS-32 B30	1	–	–	–	–	–	–	–
						HCS/RAYCAP SINGLE RUN DC CABLES (CCN TO RRU)	3/4"	8	12'		RRUS-12 B2	1	–	–	–	–	–	–	–
						7/8 COAX JUMPER (RRU TO ANTENNA)	7/8"	8	12'		–	–	–	–	–	–	–	–	–
						–	–	–	–		–	–	–	–	–	–	–	–	–
						–	–	–	–		–	–	–	–	–	–	–	–	–
						–	–	–	–		–	–	–	–	–	–	–	–	–
						–	–	–	–		–	–	–	–	–	–	–	–	–
A (P-A, A-A)	350°	32'	KMW	E-X-UW-RR-14-65-18-R-RT	1	HCS/RAYCAP SINGLE RUN DC CABLES (CCN TO RRU)	3/8"	3	12'	2 -BLUE	RRUS-2448 B5/B12	1	–	–	–	–	–	–	–
						HCS/RAYCAP SINGLE RUN DC CABLES (CCN TO RRU)	3/4"	3	12'		RRUS 32 B66	3	–	–	–	–	–	–	–
						7/8 COAX JUMPER (RRU TO ANTENNA)	7/8"	8	12'		–	–	–	–	–	–	–	–	–
						HCS/RAYCAP SINGLE RUN DC CABLES (CCN TO RRU)	3/8"	1	12'		RRUS-4478 B14	1	–	–	–	–	–	–	–
A (P-A, A-A)	350°	32'	KMW	E-X-UW-RR-14-65-18-R-RT	1	HCS/RAYCAP SINGLE RUN DC CABLES (CCN TO RRU)	3/4"	4	12'	3 -WHITE	RRUS 32 B2	1	–	–	–	–	–	–	–
						7/8 COAX JUMPER (RRU TO ANTENNA)	7/8"	8	12'		–	–	–	–	–	–	–	–	–
B (P-B, B-B)	110°	32'	KMW	E-X-UW-RR-14-65-18-R-RT	1	HCS/RAYCAP SINGLE RUN DC CABLES (CCN TO RRU)	3/8"	3	12'	1 -BLUE	RRUS 32 B30	1	–	–	–	–	–	–	–
						HCS/RAYCAP SINGLE RUN DC CABLES (CCN TO RRU)	3/4"	2	12'		RRUS-12 B5	1	–	–	–	–	–	–	–
						7/8 COAX JUMPER (RRU TO ANTENNA)	7/8"	4	12'		–	–	–	–	–	–	–	–	–
	–	–	–			–	–	–	–		–	–	–	–	–	–	–	–	–
						–	–	–	–		–	–	–	–	–	–	–	–	–
						–	–	–	–		–	–	–	–	–	–	–	–	–
						–	–	–	–		–	–	–	–	–	–	–	–	–
B (P-B, B-B)	110°	32'	KATHREIN	840-37066-K	1	HCS/RAYCAP SINGLE RUN DC CABLES (CCN TO RRU)	3/8"	4	12'	2 -BLUE	RRUS-4449 B5/B12	1	–	–	–	–	–	–	–
						HCS/RAYCAP SINGLE RUN DC CABLES (CCN TO RRU)	3/4"	3	12'		RRUS-32 A66	1	–	–	–	–	–	–	–
						7/8 COAX JUMPER (RRU TO ANTENNA)	7/8"	8	12'		–	–	–	–	–	–	–	–	–
						HCS/RAYCAP SINGLE RUN DC CABLES (CCN TO RRU)	3/8"	1	12'		RRUS-4478 B14	1	–	–	–	–	–	–	–
B (P-B, B-B)	110°	32'	KATHREIN	840-37066-K	1	HCS/RAYCAP SINGLE RUN DC CABLES (CCN TO RRU)	3/4"	2	12'	3 -WHITE	RRUS 32 B2	1	–	–	–	–	–	–	–
						7/8 COAX JUMPER (RRU TO ANTENNA)	7/8"	8	12'		–	–	–	–	–	–	–	–	–
C (P-C, C-C)	190°	32'	KATHREIN	840-37066-K	1	HCS/RAYCAP SINGLE RUN DC CABLES (CCN TO RRU)	3/8"	3	12'	1 -GREEN	RRUS-12 B5	1	–	–	–	–	–	–	–
						HCS/RAYCAP SINGLE RUN DC CABLES (CCN TO RRU)	3/4"	2	12'		RRUS-4415 B30	1	–	–	–	–	–	–	–
						7/8 COAX JUMPER (RRU TO ANTENNA)	7/8"	8	12'		–	–	–	–	–	–	–	–	–
						–	–	–	–		–	–	–	–	–	–	–	–	–
						–	–	–	–		–	–	–	–	–	–	–	–	–
						–	–	–	–		–	–	–	–	–	–	–	–	–
C (P-C, C-C)	190°	32'	KATHREIN	840-37066-K	1	HCS/RAYCAP SINGLE RUN DC CABLES (CCN TO RRU)	3/8"	4	12'	2 -GREEN	RRUS-4449 B5/B12	1	–	–	–	–	–	–	–
						HCS/RAYCAP SINGLE RUN DC CABLES (CCN TO RRU)	3/4"	4	12'		RRUS-4843 B2/B66	1	–	–	–	–	–	–	–
						7/8 COAX JUMPER (RRU TO ANTENNA)	7/8"	8	12'		–	–	–	–	–	–	–	–	–
						HCS/RAYCAP SINGLE RUN DC CABLES (CCN TO RRU)	3/8"	1	12'		RRUS-4478 B14	1	–	–	–	–	–	–	–
C (P-C, C-C)	190°	32'	KATHREIN	840-37066-K	1	HCS/RAYCAP SINGLE RUN DC CABLES (CCN TO RRU)	3/4"	3	12'	3 -WHITE	–	–	–	–	–	–	–	–	–
						7/8 COAX JUMPER (RRU TO ANTENNA)	7/8"	8	12'		–	–	–	–	–	–	–	–	–
						–	–	–	–		–	–	–	–	–	–	–	–	–
						–	–	–	–		–	–	–	–	–	–	–	–	–
						–	–	–	–		–	–	–	–	–	–	–	–	–
						–	–	–	–		–	–	–	–	–	–	–	–	–
D (P-D, D-D)	290°	32'	KATHREIN	840-37066-K	1	HCS/RAYCAP SINGLE RUN DC CABLES (CCN TO RRU)	3/8"	4	12'	1 -GRAY	RRUS-4449 B5/B12	1	–	–	–	–	–	–	–
						HCS/RAYCAP SINGLE RUN DC CABLES (CCN TO RRU)	3/4"	4	12'		RRUS-4843 B2/B66	1	–	–	–	–	–	–	–
						7/8 COAX JUMPER (RRU TO ANTENNA)	7/8"	8	12'		–	–	–	–	–	–	–	–	–
						HCS/RAYCAP SINGLE RUN DC CABLES (CCN TO RRU)	3/8"	1	12'		RRUS-4478 B14	1	–	–	–	–	–	–	–
D (P-D, D-D)	290°	32'	KATHREIN	840-37066-K	1	HCS/RAYCAP SINGLE RUN DC CABLES (CCN TO RRU)	3/4"	2	12'	2 -GRAY	–	–	–	–	–	–	–	–	–
						7/8 COAX JUMPER (RRU TO ANTENNA)	7/8"	8	12'		–	–	–	–	–	–	–	–	–
						–	–	–	–		–	–	–	–	–	–	–	–	–
						–	–	–	–		–	–	–	–	–	–	–	–	–
						–	–	–	–		–	–	–	–	–	–	–	–	–
						–	–	–	–		–	–	–	–	–	–	–	–	–
D (P-D, D-D)	290°	32'	KATHREIN	840-37066-K	1	HCS/RAYCAP SINGLE RUN DC CABLES (CCN TO RRU)	3/8"	4	12'	3 -GRAY	RRUS-4449 B5/B12	1	–	–	–	–	–	–	–
						HCS/RAYCAP SINGLE RUN DC CABLES (CCN TO RRU)	3/4"	4	12'		RRUS-4843 B2/B66	1	–	–	–	–	–	–	–
						7/8 COAX JUMPER (RRU TO ANTENNA)	7/8"	8	12'		–	–	–	–	–	–	–	–	–
						HCS/RAYCAP SINGLE RUN DC CABLES (CCN TO RRU)	3/8"	1	12'		RRUS-4478 B14	1	–	–	–	–	–	–	–
D (P-D, D-D)	290°	32'	KATHREIN	840-37066-K	1	HCS/RAYCAP SINGLE RUN DC CABLES (CCN TO RRU)	3/4"	3	12'	4 -GRAY	–	–	–	–	–	–	–	–	–
						7/8 COAX JUMPER (RRU TO ANTENNA)	7/8"	8	12'		–	–	–	–	–	–	–	–	–
						–	–	–	–

Exhibit B
Draft New License Agreement

IN-BUILDING LICENSE AGREEMENT
BETWEEN
BROWARD COUNTY
AND
AT&T MOBILITY NATIONAL ACCOUNTS LLC

This In-Building License Agreement ("License Agreement") between Broward County, a political subdivision of the State of Florida, whose address is 115 South Andrews Avenue, Fort Lauderdale, Florida 33301 ("County"), and AT&T Mobility National Accounts LLC, a Delaware limited liability company, whose address is 1025 Lenox Park Blvd NE Atlanta, Georgia 30319, as contracting agent on behalf of the applicable AT&T affiliated entities providing wireless telecommunications equipment and services ("Carrier" or "AT&T"), is entered into and effective as of the date this License Agreement is fully executed by the Parties ("Effective Date"). County and Carrier are hereinafter referred to collectively as the "Parties," and individually referred to as a "Party."

RECITALS

A. County owns the property and the improvements located at 201 Southeast 6 Street, Fort Lauderdale, Florida ("County Property"), as more particularly described on **Exhibit A,** attached hereto and made a part hereof.

B. Carrier requires a license from County to access the County Property to install, maintain, inspect, remove, augment and operate the equipment necessary to extend and distribute the cellular signal of the Carrier within the County Property ("In-Building Solutions").

C. Carrier represents and warrants that Carrier is authorized to transact business in the State of Florida.

D. County finds it to be in the public interest to grant Carrier a license for the use stated herein under the terms and conditions set forth below.

LICENSE AGREEMENT

NOW, THEREFORE, for good and valuable consideration, the receipt and sufficiency of which are hereby acknowledged, the Parties agree as follows:

1. DESCRIPTION OF LICENSED PREMISES:

County hereby grants to Carrier the right, license, and privilege of accessing and using a portion of the County Property, which is more particularly described on **Exhibit B,** attached hereto and made a part hereof ("Licensed Premises"), in accordance with the terms of this License Agreement.

2. TERM/RENEWAL:

The term of the License Agreement shall be effective for ten (10) years commencing on the Effective Date ("Initial Term"). The Parties shall have the option to renew the License Agreement, upon the same terms and conditions, for up to four (4) additional five (5) year terms ("Renewal Term(s)"). To exercise a renewal option, Carrier must send written notice to County, at least sixty (60) calendar days before the expiration of the then-current term, stating its desire to exercise a renewal option, and County shall notify Carrier in writing within thirty (30) calendar days after receipt of such notice as to whether County consents to such renewal. The Initial Term, and any Renewal Term, are collectively referred to herein as the "Term."

3. TAXES:

If any taxes, fines, and assessments are levied under this License Agreement and are related to Carrier's use of the Licensed Premises ("Taxes"), Carrier shall directly pay such Taxes to the applicable taxing authority.

4. USE OF LICENSED PREMISES:

4.1 Carrier and its employees, agents, contractors, and subcontractors ("Carrier's Representatives") shall use and access the Licensed Premises only to install, maintain, inspect, remove, and operate, at Carrier's sole option and cost, any In-Building Solutions equipment, including cable lines, lock boxes, repeaters, amplifiers, antennas, base station equipment, and other facilities necessary or useful to provide communication services to the County Property ("Carrier Equipment"). The Licensed Premises shall not be used for any other purpose whatsoever without the prior written consent of County.

4.2 Approved Plans.

4.2.1 At least ninety (90) calendar days after the Effective Date, Carrier shall provide County with drawings, plans, and/or specifications reasonably detailing the location and size of the Carrier Equipment ("Plans"). Carrier shall submit these Plans in substantially the same form as **Exhibit C**, attached hereto, along with any other information required by the Enterprise Technology Services ("ETS") Director of Broward County ("Director").

4.2.2 The Director shall give Carrier written notice as to whether County approves such Plans at least sixty (60) calendar days after County receives the Plans. If County disapproves of the Plans, the written notice shall specify the reasons for County's disapproval ("Disapproval Notice"). Carrier shall revise the Plans in accordance with the Disapproval Notice, and shall submit new

Plans to County at least ten (10) business days after receiving the Disapproval Notice. Carrier shall repeat the same procedure as set forth above until County approves the Plans ("Approved Plans").

4.2.3 Carrier may not perform any work on the Licensed Premises until the Plans for such work become Approved Plans. Carrier may make necessary alterations or additions to the Approved Plans with prior written approval from the Director. When such alterations or additions are approved by the Director, they shall become a part of the Approved Plans.

4.3 Installation.

4.3.1 Carrier and Carrier's Representatives may install the Carrier Equipment, at Carrier's sole cost and expense, and in accordance with the Approved Plans ("Carrier Installation"), provided that Carrier shall:

(a) perform such construction in a safe manner, consistent with generally accepted construction standards; and

(b) perform such construction and work in such a way as to reasonably minimize interference with the operation of the Licensed Premises; and

(c) obtain, prior to the commencement of any construction and work, necessary federal, state, and municipal permits, licenses, and approvals.

4.3.2 Carrier shall schedule the dates and times necessary for the Carrier Installation with ETS. Carrier shall complete the Carrier Installation within a commercially reasonable timeframe, but no longer than one hundred eighty (180) calendar days, from the date that the Carrier Installation commenced. Notwithstanding the foregoing, the County Administrator, in his or her sole discretion, may grant Carrier up to two (2) additional one hundred eighty (180) day extensions to complete the Carrier Installation.

4.3.3 During the Carrier Installation, County will provide Carrier with space on the seventeenth (17th) floor of the County Property to store and secure Carrier Equipment and all materials needed for the Carrier Installation ("Staging Location"). Carrier may use the Staging Location at its own risk; County shall not be liable for any damage, theft, misappropriation, or loss thereof, except as

provided for in Section 0.0.6.1.

4.3.4 The Carrier Installation shall not require any new roof penetrations or vertical penetrations in the County Property. If the Carrier Installation requires access to the roof of the County Property, Carrier may use a portion of the existing conduits and penetrations that lead up to said roof for GPS antennas as long as no new roof penetrations are made. The Carrier Installation may require new horizontal penetrations within the same floor of the Licensed Premises, and County shall provide such horizontal penetrations in accordance with Section 5.1 and as specified in the Approved Plans.

4.4 Carrier shall use commercially reasonable efforts to mitigate material signal interference between the Carrier Equipment and the County's equipment, or the operation of the County Property, to the extent the interference is caused by the Carrier Equipment. If the Carrier Equipment causes the public safety radio system to become inoperable in any area of the County Property, Carrier will begin the process of correcting this material interference within four (4) hours, or as soon as reasonably practicable, after the receipt of notice from County.

4.5 Carrier agrees that it will not, without the County's prior written consent, permit the County Property to be used or accessed by any person, firm, entity, or corporation other than Carrier and Carrier's Representatives. Carrier may, without the County's consent, contract or subcontract any portion of the work contemplated by this License Agreement to any person or entity competent to perform such work. Carrier shall require its subcontractors, by written contract, to comply with the provisions of this License Agreement to the same extent as Carrier. A subcontract shall not relieve Carrier of any of its obligations under this License Agreement.

4.6 Carrier shall not (i) commit any waste, nuisance, or hazardous trade or occupation on, in, or upon the County Property; (ii) take any action, or keep anything in or about the County Property, that will increase the risk of any hazard, fire, or catastrophe; (iii) damage the County Property; and (iv) use or occupy the County Property in any manner that will violate any laws or regulations of any governmental authority.

5. <u>COUNTY'S RESPONSIBILITIES</u>:

5.1 County shall provide to Carrier, at no cost to Carrier, any conduit, holes, penetrations, wire ways, fiber wiring, utilities, and any other items which County, in its sole discretion, determines is necessary for the completion of the Carrier Installation. County shall also be responsible for any necessary extension of the telecom/data circuit from the demarcation point to the location where a base station or small cell is deployed.

5.2 If County is required to provide any items for the Carrier Installation under Section 5.1, County shall reasonably cooperate with Carrier to supply such items, including, but not limited to, transport within a reasonable time.

5.3 County shall provide to Carrier, at County's sole cost, all electrical circuits, electricity, and rack space within the Licensed Premises, in accordance with **Exhibit C**, that is sufficient, climate controlled, and in such a condition which will allow Carrier to install, maintain, inspect, remove, and operate the Carrier Equipment.

5.4 County covenants that it will maintain the Licensed Premises in a suitable and safe working environment and keep the Licensed Premises free of any hazardous substance or waste, except for small amounts that are properly stored as permitted by applicable law ("Hazardous Materials"). County shall not require Carrier to handle, remove, or dispose of Hazardous Materials, or to perform any work at any premises that is not a suitable and safe working environment. County agrees that Carrier shall not be liable for any Hazardous Materials on the County Property, provided that Carrier or Carrier's Representatives did not use, produce, manufacture, store, dispose of, or discharge such Hazardous Materials in, under, or about the County Property.

5.5 County shall not interfere with the installation, maintenance, inspection, removal, or operation of the Carrier Equipment on the Licensed Premises. County shall secure the space where the Carrier Equipment is located and provide a security escort any time Carrier or Carrier's Representatives reasonably need to access such space. County shall not allow any other wireless carrier to use the Carrier Equipment or to access the space where the Carrier Equipment is located.

5.6 County will be solely responsible for all costs associated with altering the Carrier Equipment and/or moving the Carrier Equipment within the Licensed Premises to a new location if such alteration or relocation is (i) a result of County remodeling the Licensed Premises; or (ii) requested by the County but is not necessary for the Carrier Equipment to operate properly. These type of alterations or relocations of Carrier Equipment are subject to Carrier's written approval, which shall not be unreasonably withheld or delayed.

5.7 During the Term of this License Agreement, County will notify Carrier of its intent to vacate the Licensed Premises at least sixty (60) business days before such vacancy.

6. IMPROVEMENTS TO LICENSED PREMISES:

6.1 The Carrier Equipment shall belong to Carrier and shall be installed, maintained, and operated on the Licensed Premises at the Carrier's sole risk and obligation. County shall not be liable for any damage to the Carrier Equipment, or any theft, misappropriation, or loss thereof; provided, however, that subject to

Section 12.1, County will be liable for any damage to the Carrier Equipment caused by the negligent or willful acts or omissions of County, its employees, agents, or contractors. Nothing herein shall be deemed, construed, or asserted as County waiving its sovereign immunity or waiving any limits established by Section 768.28, Florida Statutes.

6.2 Upon the expiration or earlier termination of this License Agreement, Carrier shall, at its sole cost and expense, remove the Carrier Equipment (other than any Carrier Equipment which are underground conduit or vaults) and Carrier's other personal property from the Licensed Premises, and repair all damage caused by such removal. Any Carrier Equipment not removed from the Licensed Premises within sixty (60) calendar days after the expiration or earlier termination of this License Agreement shall be deemed the property of County without further liability to Carrier.

7. SECURITY/ACCESS:

7.1 County shall allow Carrier and its employees, agents, contractors, and subcontractors access to the Licensed Premises during dates and times that Carrier has scheduled with ETS ("Scheduled Appointments"), and at all times during emergencies, for the purposes allowed under the terms and conditions of this License Agreement. In the event of an emergency requiring access outside of Scheduled Appointments, Carrier shall access the Licensed Premises by contacting the Facilities Management Division's Work Control Center at 954-357-6600. "Emergency" shall mean a situation in which (a) an immediate threat is posed to (i) the health and safety of any occupant or visitor to the building; or (ii) the structural integrity of the building, or (b) there is a disruption or outage in communication services to the Licensed Premises.

7.2 Carrier will cooperate with County and provide any and all information that County may request to determine appropriate security and network access restrictions, and to verify Carrier's compliance with County security standards. Carrier shall comply at all times with all applicable County access and security standards, including the Security Requirements set forth in **Exhibit D,** and any other restrictions or standards for which County provides written notice to Carrier.

7.3 Carrier shall immediately notify the County, in compliance with the "Notices" Section of this License Agreement, of any terminations/separations of who had access to the Licensed Premises or who were performing services under this License Agreement. Carrier shall provide this notice within one (1) calendar day from the date of such termination/separation.

8. ASSIGNMENT OR SUBCONTRACTING:

8.1 Carrier may, without County's consent, assign in whole or relevant part its rights and obligations under this License Agreement to an affiliate of Carrier. In

no other case may this License Agreement be assigned by either Party without the prior written consent of the other Party, which consent will not be unreasonably withheld or delayed. In the case of any assignment, the assigning Party will remain financially responsible for the performance of the assigned obligations.

8.2 Carrier may subcontract to an affiliate or a third-party work to be performed under this License Agreement, but it will remain financially responsible for the performance of such obligations.

9. INSPECTIONS:

County or its agents, or any authorized employee of said agent, may enter upon the Licensed Premises to determine if Carrier is using the Licensed Premises consistent with the terms of this License Agreement.

10. WARRANTIES:

Carrier represents and warrants that all services provided under this License Agreement will be performed by a person duly qualified and sufficiently experienced to perform such services and, where required, licensed by all appropriate governmental authorities in the applicable area(s).

11. INDEMNIFICATION:

Carrier shall at all times hereafter indemnify, hold harmless and defend County and all of County's current and former officers, agents, servants, and employees (collectively, "Indemnified Party") from and against any and all causes of action, demands, claims, losses, liabilities and expenditures for any tangible property damage, death, or bodily injury, including attorneys' fees, court costs, and expenses (collectively, a "Claim"), raised or asserted by any person or entity not a party to this License Agreement, which Claim is caused or alleged to be caused, in whole or in part, by any intentional, reckless, or negligent act or omission of Carrier or its current or former officers, employees, agents, or servants, arising from, relating to, or in connection with this License Agreement. In the event any Claim is brought against an Indemnified Party, Carrier shall, upon written notice from County, resist and defend each Indemnified Party against each such Claim through counsel satisfactory to County or, at County's option, pay for an attorney selected by the County Attorney to defend the Indemnified Party. The obligations of this Section shall survive the expiration or earlier termination of this License Agreement.

12. LIMITATION OF LIABILITY:

12.1 Unless otherwise expressly set forth in this License Agreement, either Party's entire liability and the other Party's exclusive remedy for damages on account of any claim arising out of and not disclaimed under this License

Agreement shall be limited as follows:

(a) for bodily injury, death or damage to real property or to tangible personal property proximately caused by a Party's negligence, proven direct damages;

(b) for any third-party claims, the remedies available under Section 11 of this License Agreement; or

(c) for claims arising from the other Party's gross negligence or willful misconduct, proven damages and any applicable statutory damages (including fines and penalties) in the event of a false claim.

12.2 Except as may be recoverable under Section 12.1, Carrier will not be liable for any damages arising out of or relating to mistakes, omissions, interruptions, delays, errors, or defects in the Carrier Equipment.

12.3 Except for the indemnification obligations under Section 11 of this License Agreement, or in the case of a Party's gross negligence or willful misconduct, neither Party will be liable to the other Party for any indirect, incidental, consequential, punitive, reliance or special damages, including, without limitation, damages for lost profits, advantage, savings or revenues, or increased cost of operations.

12.4 Disclaimer of Liability. Carrier will not be liable for any damages arising out of or relating to: interoperability, access or interconnection of the Carrier Equipment with applications, data, equipment, services, content, or networks provided by County or third parties; except to the extent required under this License Agreement, service defects, service levels, delays, or any service error or interruption, including interruptions or errors in routing or completing any 911 or other emergency response calls or any other calls or transmissions; lost or altered messages or transmissions; or unauthorized access to or theft, alteration, loss or destruction of County's (or its affiliates', users' or third parties') applications, content, data, programs, information, networks or systems.

12.5 Disclaimer of Warranties. Carrier makes no representations or warranties, express or implied, specifically disclaims any representation or warranty of merchantability, fitness for a particular purpose, title or non-infringement and specifically disclaims any warranty arising by usage of trade or by course of dealing; further, Carrier makes no representation or warranty that telephone calls or other transmissions will be routed or completed without error or interruption (including calls to 911 or any similar emergency response number) and makes no guarantee regarding network security or coverage.

12.6 Application and Survival. The disclaimer of warranties and limitations of liability set forth in this License Agreement will apply regardless of the form of

action, whether in contract, equity, tort, strict liability, or otherwise, of whether damages were foreseeable and of whether a party was advised of the possibility of such damages and will apply so as to limit the liability of each Party and its affiliates and their respective employees, directors, subcontractors, and suppliers.

13. INSURANCE:

13.1 Carrier shall maintain at its sole expense, at all times during the Term of this License Agreement (unless otherwise provided), at least the minimum insurance coverage designated in **Exhibit E** in accordance with the terms and conditions stated in this Section.

13.2 Carrier shall utilize an insurer with a current A.M. Best Company Rating of "A-" and a minimum Financial Size Category of "VII," or an insurer that holds a valid Florida Certificate of Authority eligible to transact insurance in the State of Florida. Carrier shall be responsible for the payment of any policy deductibles. Self-insured retentions on coverage required by County must be declared in writing. Carrier's insurance shall provide primary coverage and shall not require contribution or be called upon to contribute to a loss from County's insurance or self-insurance program maintained by County.

13.3 Carrier agrees to list Broward County as an additional insured under Carrier's required commercial liability insurance policy and any excess liability insurance policy needed to meet required total limits. The listed certificate holder on all required policies shall be "Broward County."

13.4 Commercial General Liability Insurance. A Commercial General Liability Insurance Policy shall be provided, with minimum limits of Three Million Dollars ($3,000,000) per occurrence combined single limit for bodily injury liability and property damage liability and shall contain minimum limits of Five Million Dollars ($5,000,000) per aggregate. Coverage must include:

Premises and/or operations.
Independent contractors.
Products and/or Completed Operations for contracts.
Contractual Liability applicable to this License Agreement
Personal Injury Coverage, with minimum limits of coverage equal to those required for Bodily Injury Liability and Property Damage Liability.

13.5 Business Automobile Liability Insurance. Business Automobile Liability Insurance, if performance of services requires the use of an automobile, with minimum limits of Two Million Dollars ($2,000,000) per occurrence, combined single limit for bodily injury and property damage. Coverage must include:

Owned Vehicles.
Hired and Non-Owned Vehicles.

13.6 Workers' Compensation Insurance. Workers' Compensation Insurance as required by the State of Florida, with Statutory Limits, and Employers' Liability Insurance with limit of no less than Two Million Dollars ($2,000,000) per each accident for bodily injury or disease.

13.7 Umbrella Coverage. Carrier shall maintain an umbrella insurance policy providing coverage in excess of its primary commercial general liability, automobile liability, and employer's liability policies in an amount not less than ten Million Dollars ($10,000,000) per occurrence and Ten Million Dollars ($10,000,000) general aggregate.

13.8 Professional Liability Insurance including cyber/ network coverage. Professional Liability Insurance (E & O) shall be provided with minimum limits of Three Million Dollars ($3,000,000.00) per claim or wrongful act and in the aggregate and shall cover those sources of liability arising out of the rendering or failure to render professional services in the performance of the services required in this License Agreement. Coverage must be on a claims-made basis, and must respond to claims reported within three (3) years following the period for which coverage is required.

13.9 Prior to the commencement of work, but in no event later than fifteen (15) calendar days after execution of this License Agreement, Carrier shall provide County with proof of insurance in the form of Certificate(s) of Insurance and applicable endorsements. Failure to timely provide acceptable proof of insurance, as determined by County, shall entitle County to terminate this License Agreement without any liability to Carrier.

13.10 Insurance coverage is not to cease and is to remain in force and effect until the expiration or earlier termination of the License Agreement and County determines all performance required of Carrier has been satisfied. Carrier shall provide notice to County of any cancellation of any required insurance at least thirty (30) calendar days prior to the date of expiration and shall concurrently provide County with a copy of its updated Certificate of Insurance. Carrier shall ensure that there is no lapse of coverage at any time during the Term of this License Agreement. Carrier shall provide certified copies of any policy upon County's request.

13.11 If Carrier hires subcontractor(s) to perform any work under this License Agreement, Carrier shall require its subcontractor(s) to carry reasonable and prudent coverage and limits, policy.

13.12 County reserves the right to review and revise any insurance requirements, including, but not limited to, deductibles, limits, coverage, and endorsements at the time of any written amendments to this License Agreement, or the exercise of a Renewal Term.

14. DAMAGE OF LICENSED PREMISES:

Carrier shall repair any damage of any kind or nature to the Licensed Premises and County property located thereon caused by the use of the Licensed Premises by Carrier or its employees, agents, contractors, or subcontractors.

Carrier shall give County prompt written notice, in compliance with the "Notices" Section of this License Agreement, of any occurrence, incident, or accident occurring on the County Property as a result of this License Agreement.

15. DEFAULT/TERMINATION:

15.1 Should either Party default in the performance of a material provision of this License Agreement and fail to correct same within thirty (30) calendar days after having received notice specifying the nature of such default, unless such default is of a nature that it cannot be completely cured within thirty (30) calendar days, if a cure is not commenced within such time and thereafter diligently pursued to completion, then the non-defaulting Party may terminate this License Agreement and may pursue all other remedies available to it at law and/or equity.

15.2 INTENTIONALLY DELETED.

15.3 Equipment Removal Fee. If County terminates the License Agreement under Section 15.2, County shall pay the equipment removal fees, as detailed in **Exhibit C-1**, attached hereto and made a part hereof.

16. AMENDMENTS:

No modification, amendment, or alteration of the terms or conditions contained herein shall be effective unless contained in a written document executed by the Parties hereto, with the same formality and of equal dignity herewith.

17. SURRENDER UPON TERMINATION:

Carrier agrees that it will leave the Licensed Premises in the condition existing at the commencement of this License Agreement, except for all alterations, adjustments, partitions, additions, improvements, or normal wear and tear, unless otherwise specified in Section 6.

18. MATERIALITY AND WAIVER OF BREACH:

County and Carrier agree that each requirement, duty, and obligation set forth herein was bargained for at arms-length and is agreed to by the Parties in exchange for quid pro quo, that each is substantial and important to the formation of this License Agreement, and that each is, therefore, a material term hereof.

Either Party's failure to enforce any provision of this License Agreement shall not be deemed a waiver of such provision or modification of this License Agreement. A waiver of any breach of a provision of this License Agreement shall not be deemed a waiver of any subsequent breach and shall not be construed to be a modification of the terms of this License Agreement.

19. NOTICES:

Whenever either Party desires to give notice to the other, such notice must be in writing, sent by certified United States Mail, postage prepaid, return receipt requested, or sent by nationally recognized commercial express carrier with acknowledgement of delivery, addressed to the Party for whom it is intended at the place last specified. The addresses for notice shall remain as set forth herein unless and until changed by providing written notice of such change.

NOTICE TO COUNTY:
Broward County Administrator
115 S. Andrews Avenue
Fort Lauderdale, FL 33301

With a copy mailed to:
Real Property Director
115 S. Andrews Avenue, Room 501
Fort Lauderdale, FL 33301

NOTICE TO CARRIER:
AT&T Corp.
One AT&T Way
Bedminster, NJ 07921-0752

20. INDEPENDENT CONTRACTOR:

Carrier is an independent contractor under this License Agreement. Services provided by Carrier pursuant to this License Agreement shall be subject to the supervision of Carrier. In providing such services, neither Carrier nor its agents shall act as officers, employees, or agents of County. No partnership, joint venture, or other joint relationship is created hereby. County does not extend to Carrier or Carrier's agents any authority of any kind to bind County in any respect whatsoever.

21. THIRD PARTY BENEFICIARIES:

Neither Carrier nor County intends to directly or substantially benefit a third party by this License Agreement. Therefore, the Parties agree that there are no third-party beneficiaries to this License Agreement and that no third party shall be entitled to assert a right or claim against either of them based upon this License Agreement.

22. COMPLIANCE WITH LAWS:

Carrier shall comply with all applicable federal, state, and local laws, codes, ordinances, rules, and regulations in performing its duties, responsibilities, and obligations related to this License Agreement.

23. SEVERANCE:

In the event that any part of this License Agreement is found to be invalid by a court of competent jurisdiction, that part shall be severed from this License Agreement and the balance of this License Agreement shall remain in full force and effect.

24. PUBLIC RECORDS:

To the extent Carrier is acting on behalf of the County as stated in Section 119.0701, Florida Statutes, Carrier shall:

(a) Keep and maintain public records required were County performing the services under this License Agreement;

(b) Upon request from County, provide County with a copy of the requested records or allow the records to be inspected or copied within a reasonable time and at a cost that does not exceed that provided in Chapter 119, Florida Statutes, or as otherwise provided by law;

(c) Ensure that public records that are exempt or that are confidential and exempt from public record requirements are not disclosed except as authorized by law for the duration of the License Agreement and following completion of the License Agreement if the records are not transferred to County; and

(d) Upon completion of the License Agreement, transfer to County, at no cost, all public records in possession of Carrier or keep and maintain public records required were County performing the service. If Carrier transfers all public records to County, upon the completion of the License Agreement, Carrier shall destroy any duplicate public records

that are exempt or confidential and exempt. If Carrier keeps and maintains public records upon completion of the License Agreement, Carrier shall meet all applicable requirements for retaining public records. All records stored electronically must be provided to County upon request in a format that is compatible with the information technology systems of County.

The failure of Carrier to comply with the provisions of this Section shall constitute a material breach of this License Agreement entitling County to exercise any remedy provided in this License Agreement or under applicable law. A request for public records regarding this License Agreement must be made directly to County, who will be responsible for responding to any such public records requests. Carrier will provide any requested records to County to enable County to respond to the public records request.

IF THE CARRIER HAS QUESTIONS REGARDING THE APPLICATION OF CHAPTER 119, FLORIDA STATUTES, TO THE CARRIER'S DUTY TO PROVIDE PUBLIC RECORDS RELATING TO THIS CONTRACT, CONTACT THE CUSTODIAN OF PUBLIC RECORDS AT (954) 357-5500, SCAMPBELL@BROWARD.ORG, 115 S. ANDREWS AVE., SUITE 501, FORT LAUDERDALE, FLORIDA 33301.

25. LIENS:

Carrier or its employees, agents, contractors or subcontractors shall have no power or authority to place any liens or other encumbrances of any kind or character upon the right, title, or interest of the County in and to the Licensed Premises. Carrier shall be responsible for the satisfaction or payment of any liens for any provider of work, labor, material or services claiming by, through, or under Carrier. Carrier shall also indemnify, hold harmless, and defend County against any such liens, including the reasonable fees of County's attorneys. Such liens shall be discharged by Carrier within ten (10) business days after notice by County of filing thereof by bonding, payment, or otherwise, provided that Carrier may contest, in good faith and by appropriate proceedings, any such liens.

26. JOINT PREPARATION:

The Parties hereto acknowledge that they have sought and received whatever competent advice and counsel as was necessary for them to form a full and complete understanding of all rights and obligations herein and that the preparation of this License Agreement has been a joint effort of the Parties, the language has been agreed to by the Parties to express their mutual intent, and the resulting document shall not, solely as a matter of judicial construction, be construed more severely against one of the Parties than the other.

27. HEADINGS AND INTERPRETATION:

The headings contained in this License Agreement are for reference purposes only and shall not in any way affect the meaning or interpretation of this License Agreement. All personal pronouns used in this License Agreement shall include the other gender, and the singular shall include the plural, and vice versa, unless the context otherwise requires. The terms such as "herein," "hereof," "hereunder," and "hereinafter," refer to this License Agreement as a whole and not to any particular sentence, paragraph, or section where they appear, unless the context otherwise requires.

28. PRIORITY OF PROVISIONS:

If there is a conflict or inconsistency between any term, statement, requirement, or provision of any exhibit attached hereto, any document or events referred to herein, or any document incorporated into this License Agreement by reference, and a term, statement, requirement, or provision of this License Agreement, the term, statement, requirement, or provision contained in this License Agreement shall prevail and be given effect.

29. JURISDICTION, VENUE, WAIVER OF JURY TRIAL:

This License Agreement shall be interpreted and construed in accordance with and governed by the laws of the State of Florida. The Parties agree that the exclusive venue for any lawsuit arising from, related to, or in connection with this License Agreement, shall be in the state courts of the Seventeenth Judicial Circuit in and for Broward County, Florida, or, in an appropriate case, in the United States District Court for the Southern District of Florida. **BY ENTERING INTO THIS LICENSE AGREEMENT, CARRIER AND COUNTY HEREBY EXPRESSLY WAIVE ANY RIGHTS EITHER PARTY MAY HAVE TO A TRIAL BY JURY OF ANY CIVIL LITIGATION RELATED TO THIS LICENSE AGREEMENT. IF A PARTY FAILS TO WITHDRAW A REQUEST FOR A JURY TRIAL IN A LAWSUIT ARISING OUT OF THIS LICENSE AGREEMENT AFTER WRITTEN NOTICE BY THE OTHER PARTY OF VIOLATION OF THIS SECTION, THE PARTY MAKING THE REQUEST FOR JURY TRIAL SHALL BE LIABLE FOR THE REASONABLE ATTORNEYS' FEES AND COSTS OF THE OTHER PARTY IN CONTESTING THE REQUEST FOR JURY TRIAL, AND SUCH AMOUNTS SHALL BE AWARDED BY THE COURT IN ADJUDICATING THE MOTION.**

30. PRIOR AGREEMENTS:

This document represents the final and complete understanding of the Parties and incorporates or supersedes all prior negotiations, correspondence, conversations, agreements, and understandings applicable to the matters contained herein. The Parties agree that there is no commitment, agreement, or understanding concerning the subject matter of this License Agreement that is not contained in

this written document. Accordingly, the Parties agree that no deviation from the terms hereof shall be predicated upon any prior representation or agreement, whether oral or written.

31. INCORPORATION BY REFERENCE:

Any and all Recital clauses stated above are true and correct and are incorporated herein by reference. The attached **Exhibits A, B, C, C-1, D, and E** are incorporated into and made a part of this License Agreement.

32. CONTRACT ADMINISTRATOR:

The "Contract Administrator," as referenced herein, shall be the Real Property Director of the County.

33. ACKNOWLEDGEMENT OF AUTHORITY:

Each individual executing this License Agreement on behalf of a Party hereto represents and warrants that he or she is, on the date of execution, duly authorized by all necessary and appropriate action to execute this License Agreement on behalf of such Party and does so with full legal authority.

34. COUNTY LOGO:

Carrier shall not use County's name, logo, or otherwise refer to this License Agreement in any marketing or publicity materials without the prior written consent of County.

35. MULTIPLE ORIGINALS; COUNTERPARTS:

This License Agreement may be executed in multiple counterparts, each of which shall be deemed an original, but all of which, taken together, shall constitute one and the same agreement.

IN WITNESS WHEREOF, the parties hereto have made and executed this In-Building License Agreement: BROWARD COUNTY through its Real Property Director, authorized to execute same by Board action on the _____ day of ____, 201__ (Agenda Item No.___), and AT&T MOBILITY NATIONAL ACCOUNTS LLC signing by and through its duly authorized representative.

COUNTY

WITNESSES:

BROWARD COUNTY, by and through its Real Property Director

_____
Signature Witness 1

By_____
Purvi Bhogaita
Real Property Director

_____
Print/Type Name Witness 1

____ day of _____, 20___

_____
Signature Witness 2

_____
Print/Type Name Witness 2

Approved as to form by
Andrew J. Meyers
Broward County Attorney
Governmental Center, Suite 423
115 South Andrews Avenue
Fort Lauderdale, Florida 33301
Telephone: (954) 357-7600
Telecopier: (954) 357-7641

Insurance requirements
approved by Broward County
Risk Management Division

By _____
Signature (Date)

_____
Print Name and Title above

By _____
Irma Qureshi (Date)
Assistant County Attorney

By _____
Annika E. Ashton (Date)
Senior Assistant County Attorney

IN-BUILDING LICENSE AGREEMENT BETWEEN BROWARD COUNTY AND AT&T MOBILITY NATIONAL ACCOUNTS LLC.

CARRIER

AT&T Mobility National Accounts LLC, a Delaware limited liability company

By _____
Printed Name:_____
Title: _____

_____ day of _____, 20____.

ATTEST:

_____
Secretary

(SEAL)

OR

WITNESSES:

_____
Witness 1 Signature

_____
Witness 1 Print/Type Name

_____
Witness 2 Signature

_____
Witness 2 Print/Type Name

EXHIBIT A
County Property

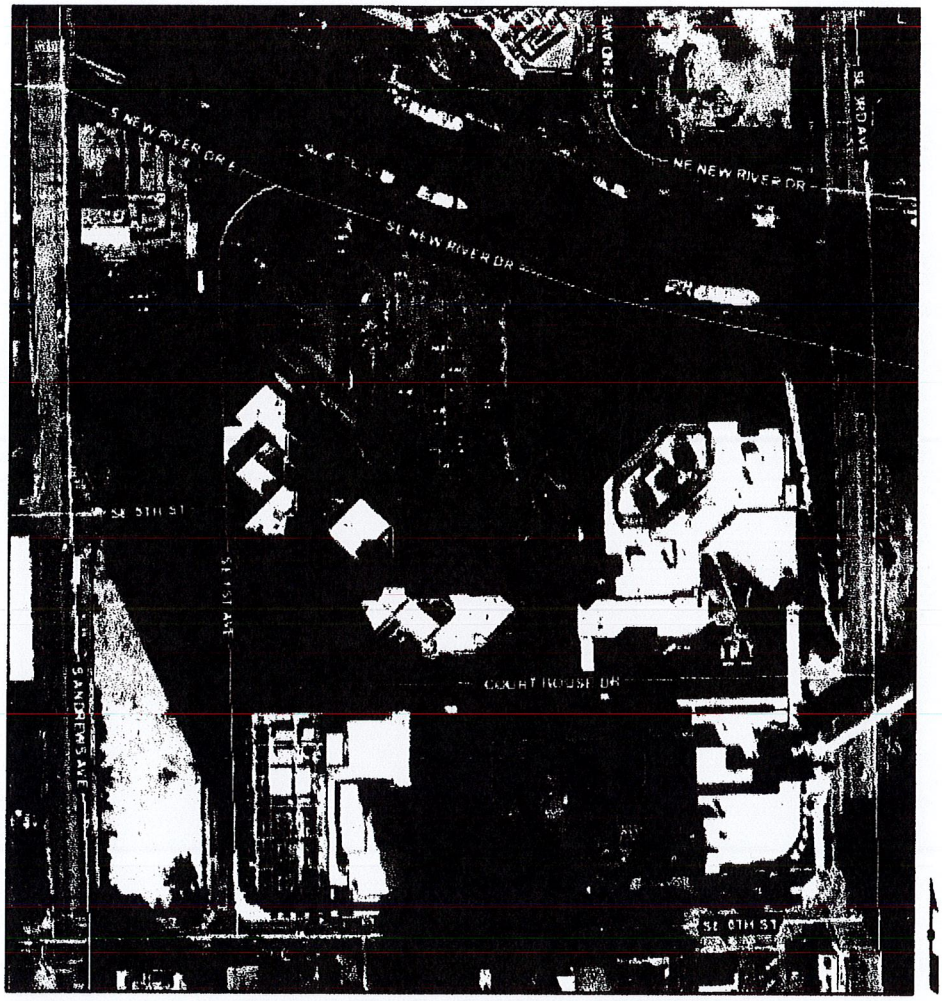

Broward County Main Courthouse, West Wing
201 SE 6th Street, Fort Lauderdale, FL 33301

Legal Description is a portion of the southwest corner of the BROWARD COUNTY PHASE I, according to the Plat thereof as recorded in Plat Book 124, Page 1, PARCEL "A" of the Public Records of Broward County; within Folio Number 5042-10-85-0010.

EXHIBIT B
Licensed Premises

Floors one (1) through twenty (20) of the County Property.

EXHIBIT C
Plans

SCOPE DEFINITION		
IN-BUILDING SOLUTIONS:	Carrier is providing the following In-Building Solutions: In-Building Service Enhancement using Base station/DAS equipment	
ADDRESS OF COUNTY PROPERTY:	201 SE 6th Street, Fort Lauderdale, FL 33301	
NUMBER OF COUNTY BUILDINGS IN SCOPE:	1	
BUILDING	Office	
TOTAL SCOPE COVERAGE AREA [SQ/FT]:	715,000 square feet	
TOTAL SCOPE COVERAGE AREA REQUIRING CARRIER COVERAGE ENHANCEMENT [SQ/FT]:	715,000 square feet	
SCOPE DESCRIPTION AND OTHER PERTINENT SCOPE DETAILS:	Carrier will provide enhanced RF coverage of LTE frequency for AT&T phones and data devices for all twenty (20) floors, encompassing 715,000 square feet, in the County Property.	
LIMITATION TO COVERAGE SCOPE:	All other buildings, elevators, and grounds excluded from the scope of this project and limited to the square footage defined above.	
General construction make-up of the facility: 1. Interior walls. 2. Exterior walls and windows. 3. Roof 4. Ceiling type. (dropped or hard)	1. Drywall and Concrete 2. Block, Brick face, several windows in office area. 3. Pitch Hip Metal 4. Drop Ceiling in office, small hard ceiling areas	

County point of contact providing information above.	Luis Socarras- Site Mgr Desk (954)-357-8227 Mobile (954)-357-8041 lsocarras@broward.org
County point of contact during installation.	Same as above

STANDARD SOLUTION AND ASSUMPTIONS

LABOR & INSTALLATION:

- On-site work will be completed during Scheduled Appointments with ETS.
- Carrier or its employees, agents, contractors, or subcontractors will optimize the new system to its maximum usable output levels.
- Proper grounding practices will be implemented.
- Carrier can use existing penetrations to install Carrier Equipment. Carrier will fire caulk any existing penetrations used for its Carrier Equipment.
- Carrier will not make any new penetrations in the Licensed Premises. County will provide any new penetrations for the Carrier Installation, as required under Section 5.1 of the License Agreement.
- Cable will be fastened using existing infrastructure, such as cable trays or existing J-hooks in the Licensed Premises where Carrier is doing installation.

SPACE:

- Anticipated RF Source equipment location restricts access to personnel authorized by County.
- RF Source location is environmentally controlled.

POWER:

- County will provide necessary power in areas where Carrier Equipment will be located or installed.
- County is not responsible for providing backup power or UPS for RF Source equipment and/or DAS equipment.

CABLING & ANTENNAS:

- Antennas and supporting equipment can be placed as needed to meet coverage objectives, provided that the placement is consistent with the Approved Plans and the License Agreement.
- Cable routing is available between RF Source equipment location and GPS antenna location.

- Cable pathways (horizontal & vertical) exist and are available for use but may require some core drilling. County will perform any core drilling required under Section 5.1 of the License Agreement.
- Antennas can be visible on the floors, subject to the County's approval.
- The County will approve cable routing along the most direct cable paths.
- Design may utilize any combination of coaxial, fiber optic or other cable, provided that it is consistent with all applicable federal, state, and local laws, codes, ordinances, rules, and regulations.
- County will provide conduit for the Carrier Installation in accordance with Section 5.1 of the License Agreement.
- County will permit Carrier to use existing roof penetrations, if necessary, for GPS antennas. Carrier cannot create new roof penetrations. If a new roof penetration is needed, it will be provided to Carrier by County.

COUNTY CARE:

- Modifications to existing County handsets (if any) are not anticipated. The Carrier Equipment will only transmit LTE/4G frequency and will only support LTE capable handsets.
- County, through its Contract Administrator, will designate one to three employees for direct access to the Carrier for account management.
- Carrier will provide the County support for the Carrier Equipment through the AT&T help desk, which can be reached by calling 1-800-317-0935.

EXHIBIT C-1
Equipment Removal Fees

A. **Location.**

Physical address of the County Property: **201 SE 6th Street, Fort Lauderdale, Florida 33301**

B. **Installation Fee.**

Amount: $ **0.00**

C. **Equipment Removal Fee(s).**

The equipment removal fee for the Carrier Equipment located at the abovementioned County Property is determined in accordance with the table below.

System Type	During 1st Year Following the Effective Date	During 2nd Year Following the Effective Date	During 3rd Year Following the Effective Date	After 3rd Year Following the Effective Date
Base Station-Enabled	**$ 400,000.**	**$ 400,000.**	**$ 40,000.**	$0.00

D. **System-Related Funding Provided by AT&T.**

Amount: $ **400,000.00**

E. **Special Notes.**

Scope: AT&T is providing an In-Building Service Enhancement ("ISE") using Base Station/DAS equipment to provide enhanced RF coverage of AT&T's LTE frequency within the Broward County Courthouse. The scope includes approximately 715,000 square feet of office area (20 floors).

AT&T recommends that the System be installed with two (2) hours of power back up in case of a power outage. This requires that each piece of active equipment be installed with DC power and battery back-up system(s). County has chosen to opt out of this recommendation, County acknowledges that the System will NOT be operational in the event of a power outage:

- ✓ County is NOT providing a UPS (uninterruptible power supply).
- ✓ County is NOT providing a Generator back up.
- ✓ County declines the installation/use of batteries in MDF and IDF closet(s).

EXHIBIT D
Security Requirements

A. General Security Requirements.

1. Carrier's employees, agents, contractors, and subcontractors ("Authorized Workers") can access the Licensed Premises during Scheduled Appointments with ETS, and during an Emergency ("Carrier's Access").
2. A representative of ETS must supervise Carrier's Access and the Carrier Installation.

B. Badge

1. All Authorized Workers servicing the County Property, pursuant to this License Agreement, must have a County issued contractor ID badge (the "Badge").
2. It is the responsibility of the Authorized Workers to obtain the Badge, which requires a Background Check (as defined below).
3. The Badge must be visible and worn at all times by Authorized Workers.
4. All Authorized Workers must also wear their company/business ID badge.

C. Criminal Background Screening

1. All Authorized Workers servicing the County Property, pursuant to this License Agreement, must undergo a "Level 2" FDLE background check (the "Background Check").
2. Authorized Workers must go to the State Attorney's Office for the Background Check. The office is located at Broward County Judicial Complex, 201 SE 6th Street, Suite 655, Fort Lauderdale, Florida 33301, and can be reached at 954-831-6969.
3. Authorized Workers must bring a company ID or letter proving employment for the Background Check.
4. Carrier and/or its Authorized Workers should contact Broward County Security at (954) 357-6000 or FMsecurity@broward.org for the required background screening requirements associated with access to the County Property. The Contract Administrator will communicate all current and appropriate requirements to the Carrier and its Authorized Workers throughout the Term of the License Agreement.

D. Sensitive Personal Information

1. As part of conducting a Background Check pursuant to Section 7.2 and Exhibit D of the License Agreement, County may obtain information regarding Carrier's Authorized Workers, which includes, but is not limited to, name, address, telephone number, driver's license number, date of birth,

health information, biometric data and other personal information obtained in connection with the Background Check (collectively, "Sensitive Personal Information").

2. To the extent permitted by Chapter 119, Florida Statutes, County shall consider Sensitive Personal Information to be private, sensitive, and confidential. Sensitive Personal Information may be subject to certain privacy laws, codes, ordinances, rules, and regulations, and requires a high degree of protection. County shall comply with all applicable federal, state, and local laws, codes, ordinances, rules, and regulations, and must treat such Sensitive Personal Information with the same degree of care as County would treat Sensitive Personal Information of its own employees, agents, contractors, and subcontractors, including, without limitation:
    i. Collect Sensitive Personal Information only as needed for a Background Check or otherwise as permissible under this License Agreement;
    ii. Not use, disclose, or distribute any Sensitive Personal Information except in connection with a Background Check, as required by Chapter 119, Florida Statutes, or as permissible under this License Agreement;
    iii. Store and transmit Sensitive Personal Information securely, including, without limitation, encrypting Sensitive Personal Information when it is at rest and being transmitted;
    iv. Restrict access to Sensitive Personal Information only to those individuals who are authorized to access such information in accordance with federal and state laws, regulations, and rules.
    v. Immediately notify Carrier if County becomes aware that (a) any of the above provisions has been breached; (b) any disclosure of Sensitive Personal Information to any third party not expressly permitted herein to receive or have access to Sensitive Personal Information; or (c) any breach of, or other security incident involving, County's systems or network that could cause or permit access to Sensitive Personal Information inconsistent with the above-referenced provisions. County shall fully cooperate with Carrier in determining, as may be necessary or appropriate, actions that need to be taken including the full scope of the breach, disclosure or security incident, corrective steps to be taken by County, the nature and content of any notifications, law enforcement involvement, or news/press/media contact, etc., and County shall not communicate directly with any Authorized Workers without Carrier's consent, which such consent shall not be unreasonably withheld or delayed; and

vi. Implement any other administrative, physical, and technical safeguards to ensure proper use, and protect against any unauthorized disclosure, of Sensitive Personal Information.